BARRINGTON
Be Inspired

NOTICE OF A PUBLIC MEETING
OF THE ARCHITECTURAL REVIEW COMMISSION

The Architectural Review Commission of the Village of Barrington will hold a meeting on **Thursday, September 24, 2020 at 7:00 P.M.** **virtually** at 200 South Hough Street, Barrington, Illinois.

ZOOM Meeting Link Available Here:
https://www.barrington-il.gov/sept24arc

Webinar ID: 889 4494 0439

Please use this information to attend with video:
Meeting Link: https://www.barrington-il.gov/sept24arc OR visit www.zoom.com click "Join a Meeting" and enter Webinar ID: 889 4494 0439

You can also join by phone by dialing any of the following numbers, then entering the Webinar ID: 889 4494 0439 followed by the pound (#) key. Dial: +1 312 626 6799 or +1 646 558 8656 or +1 301 715 8592 or +1 346 248 7799 or +1 669 900 9128 or +1 253 215 8782

PUBLIC COMMENT: Public comment for this meeting will be accepted in three (3) ways:

1.) Live public comment at the virtual meeting. Instructions for how to provide a live public comment at the virtual meeting will be provided at the beginning of the meeting and again prior to the public comment section of the meeting.

2.) By email prior to the meeting if received by 5:00 p.m., Thursday September 24, 2020. To submit public comment in advance of the meeting, submit an email to: jtennant@barrington-il.gov including: Name, Street Address (Optional), City/State, Phone (Optional), Organization, Agency, etc. Being Represented (If representing yourself, put "Self"), Topic or Agenda Item, followed by your comment. Any comments received by the deadline will be read by Staff during the public comment section of the meeting.

3.) By phone. The public without access to email or unable to attend the live virtual meeting may leave a message with the Architectural Review Commission at (847) 304-3462.

AGENDA:

- **Call to Order**
- **Roll Call**

VILLAGE HALL
200 S. HOUGH ST.
BARRINGTON, IL. 60010
(847) 304-3400

VILLAGE PRESIDENT &
VILLAGE MANAGER'S OFFICE
T. (847) 304-3444
F. (847) 304-3490

FINANCIAL SERVICES
T. (847) 304-3400
F. (847) 381-7506

DEVELOPMENT SERVICES
T. (847) 304-3460
F. (847) 381-1056

PUBLIC WORKS
300 N. RAYMOND AVE.
BARRINGTON, IL 60010
T. (847) 381-7903
F. (847) 382-3030

PUBLIC SAFETY
400 N. NORTHWEST HWY.
BARRINGTON, IL 60010

POLICE
T. (847) 304-3300
F. (847) 381-2165

FIRE
T. (847) 304-3600
F. (847) 381-1889

BARRINGTON-IL.GOV

- **Old Business**
  - **ARC 20-15: 534 S. Cook Street – Final Details**
    The Petitioner is seeking modifications to the previously approved Certificate of Appropriateness.
  - **ARC 20-22: 234 W. Lincoln Avenue – Final Details**
    The Petitioner is seeking final details approval for the approved front entranceway project.
  - **ARC 20-18: 1201-1203 S. Northwest Highway – Public Hearing**
    The Petitioner is seeking approval of a Certificate of Approval for exterior façade modifications to the existing commercial building.
  - **ARC 20-21: 207 W. Station Street – 2nd Preliminary Review**
    The Petitioner is seeking further input on potential modifications to the originally proposed preliminary plans.

- **New Business**
  - **ARC 20-25: Materials Review – Jeld Wen W-4500/5500 Series Windows**
    .

- **Approval of Minutes**

- **Planner's Report**

- **Other Business**

- **Adjournment**

Posted: Barrington Village Hall

Architectural Review Commission Members, Village President and Board of Trustees, Village Manager, Department Heads, Recording Secretary, Courier / Herald / Chicago Tribune / Chicago Sun Times

The Village of Barrington is subject to the requirements of the Americans with Disabilities Act of 1990. Individuals with disabilities who plan to attend this meeting and who require certain accommodations in order to allow them to observe and/or participate in this meeting, or who have questions regarding the accessibility of the meeting or the Village's facilities, are requested to contact the Village Clerk's Office at 200 S. Hough Street, Barrington, Illinois 60010 or call at 847/304-3400 promptly to allow the Village to make reasonable accommodations for those persons.

VILLAGE HALL
200 S. HOUGH ST.
BARRINGTON, IL. 60010
(847) 304-3400

VILLAGE PRESIDENT &
VILLAGE MANAGER'S OFFICE
T. (847) 304-3444
F. (847) 304-3490

FINANCIAL SERVICES
T. (847) 304-3400
F. (847) 381-7506

DEVELOPMENT SERVICES
T. (847) 304-3460
F. (847) 381-1056

PUBLIC WORKS
300 N. RAYMOND AVE.
BARRINGTON, IL 60010
T. (847) 381-7903
F. (847) 382-3030

PUBLIC SAFETY
400 N. NORTHWEST HWY.
BARRINGTON, IL 60010

POLICE
T. (847) 304-3300
F. (847) 381-2165

FIRE
T. (847) 304-3600
F. (847) 381-1889

BARRINGTON-IL.GOV

BARRINGTON
Be Inspired.

ARC Memorandum

To: Architectural Review Commission

From: Jennifer Tennant, Assistant Director of Development Services

Subject: ARC 20-15: 534 S. Cook Street – FINAL DETAILS

Date: September 24, 2020

On July 9, 2020, the ARC approved a Certificate of Appropriateness for exterior modifications to the noncontributing primary structure at 534 S. Cook Street including a new front porch, exterior detailing modifications and several window and door modifications on the structure. The Petitioner is proposing several modifications to the approved plans

1. **Revised column detail as requested by the ARC as a final detail.** The column has been modified to an 8" column as requested by the ARC.

2. **Modified Entranceway.** The Petitioner is considering forgoing the approved front porch for a smaller covered entrance way with the same details. The approval for the covered entrance way will be in addition to the approved front porch and the Petitioner will determine which option they ultimately elect to construct.

3. **Small Rear Addition.** The Petitioner is proposing a small 36 sq. ft. addition on the rear elevation. The proposed addition is completely in keeping with shape, mass and scale of the existing structure.

4. **Front Door Design.** The Petitioner has provided a picture of a proposed front design which is slightly different than what is shown on the drawings.

Staff recommends approval of the proposed final details.

The following documents are attached:

- Approved Elevations
- Proposed Elevations

Page 5 of 4

Approved Plans

1-A4 EAST ELEVATION

3/16" = 1'-0"

Revisions:

EAST ELEVATION

Remodel:
Vinson Residence
534 S. COOK ST
Barrington, IL 60010

S. Petersen Architects
93 Carriage Rd., Barrington, IL 60010
Office: 847-571-5396 spetersen@sbcl.com

Issue Date:
08 17 2020

Drawn By:
sqp

Job Number:
TJV 2020

A4

Approved Plans

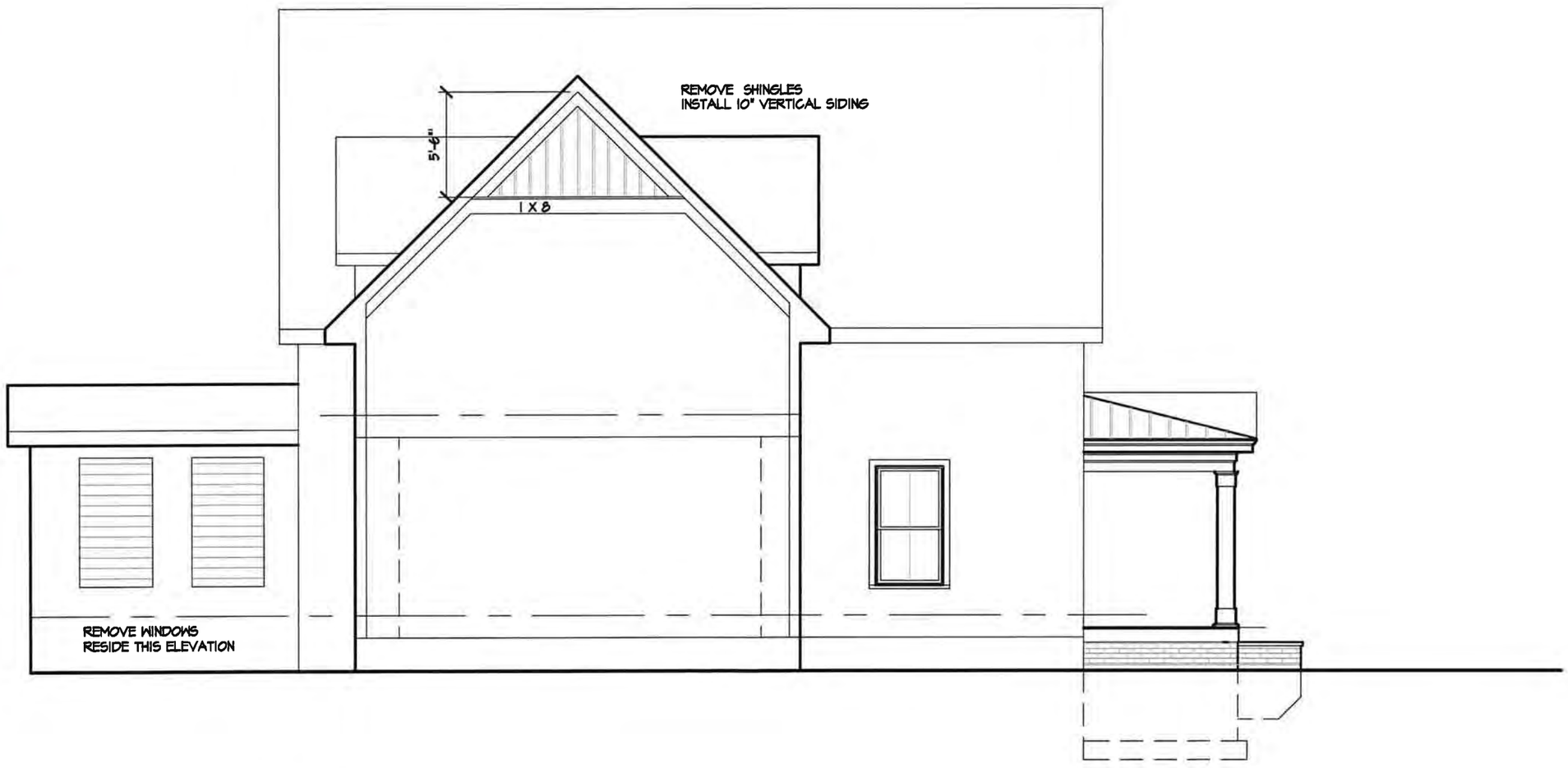

1-A5 SOUTH ELEVATION

3/16" = 1'-0"

Revisions:

SOUTH ELEVATION

Remodel:
Vinson Residence
534 S. COOK ST
Barrington, IL 60010

S. Petersen Architects
93 Carriage Rd., Barrington, IL 60010
Office: 847-571-8398 spetersen@sbcl.com

Issue Date:
06 11 2020

Drawn By:
sap

Job Number:
TJV 2020

A5

Approved Plans

1-A6 NORTH ELEVATION

3/16" = 1'-0"

Revisions:

NORTH ELEVATION

Remodel:
Vinson Residence
534 S. COOK ST
Barrington, IL 60010

S. Petersen Architects
93 Carriage Rd., Barrington, IL 60010
Office: 847-271-6398 spetersen@sbcgl.com

Issue Date:
06 17 2020

Drawn By:
scp

Job Number:
TJV 2020

A6

Approved Plans

1-A7 WEST ELEVATION

3/16" = 1'-0"

Revisions:

WEST ELEVATION

Remodel:
Vinson Residence
534 S. COOK ST
Barrington, IL 60010

S. Petersen Architects
93 Carriage Rd., Barrington, IL 60010
Office: 847-381-8399 spetersen@sbcglobal.net

Issue Date:
06 17 2020

Drawn By:
sap

Job Number:
TJV 2020

A7

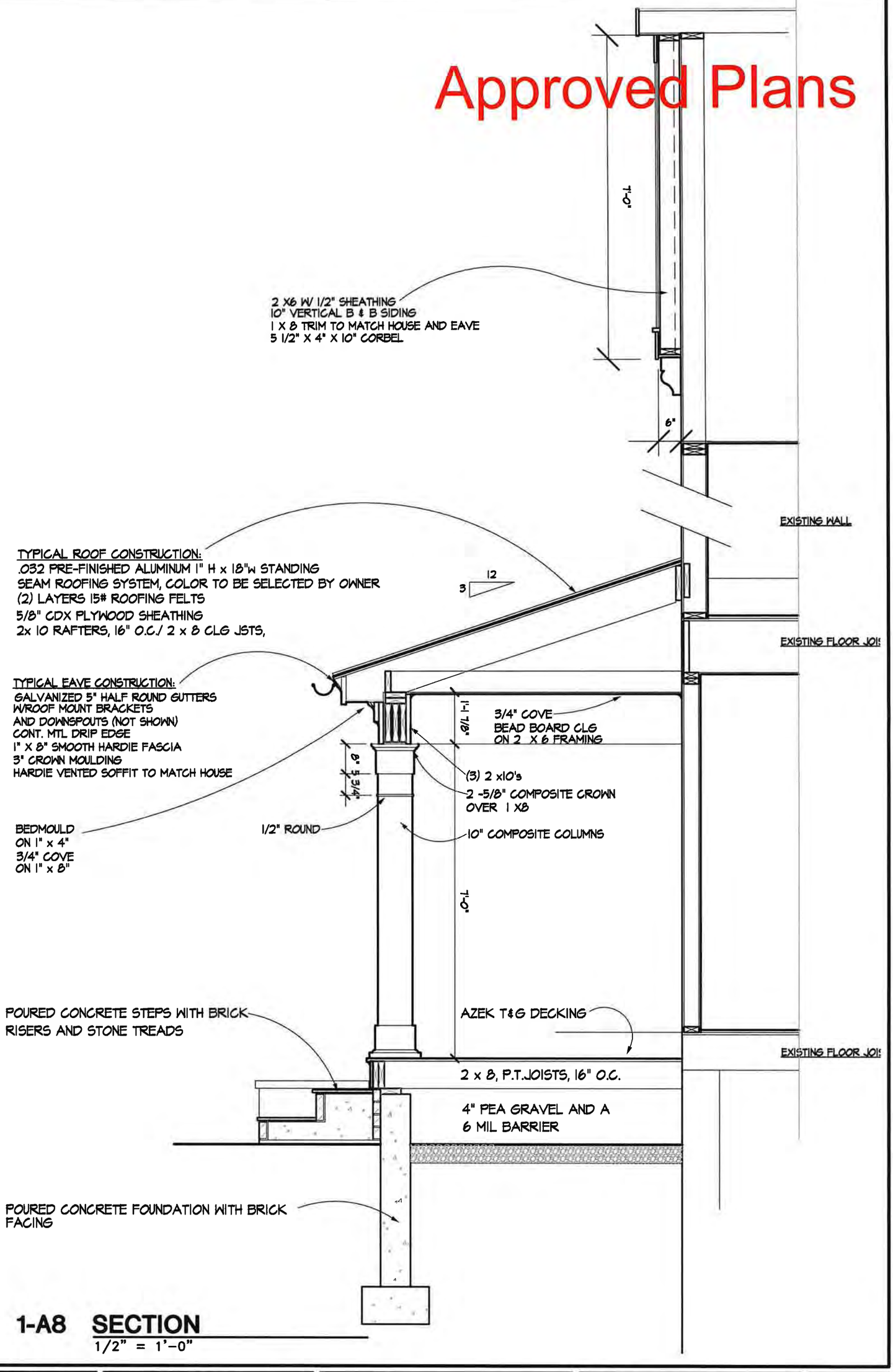

1-A8 SECTION
1/2" = 1'-0"

A8

Issue Date: 04 17 2020
Drawn By: CCP
Job Number: TJV 2020

S. Petersen Architects
93 Carriage Rd., Barrington, IL 60010
Office: 847-571-8398 spetersen@sol.com

Remodel:
Vineon Residence
534 S. COOK ST
Barrington, IL 60010

SECTION

Revisions:

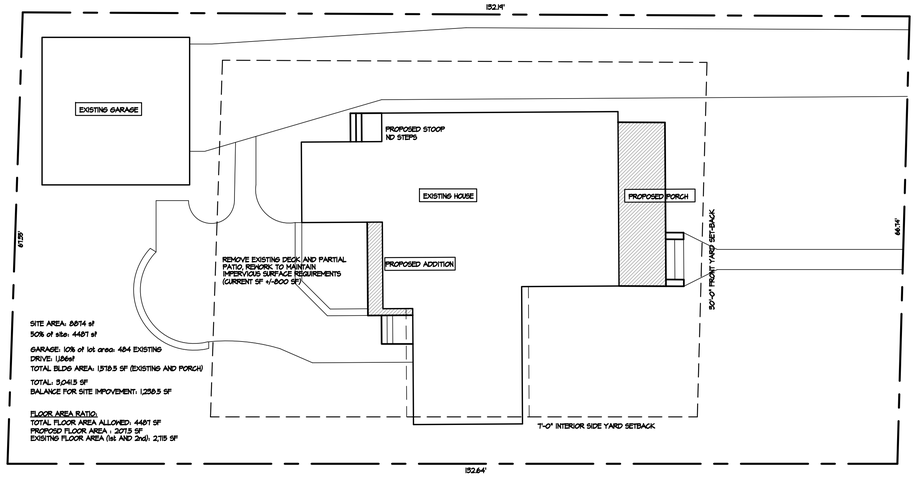

1-A1 SITE PLAN
3/32" = 1'-0"

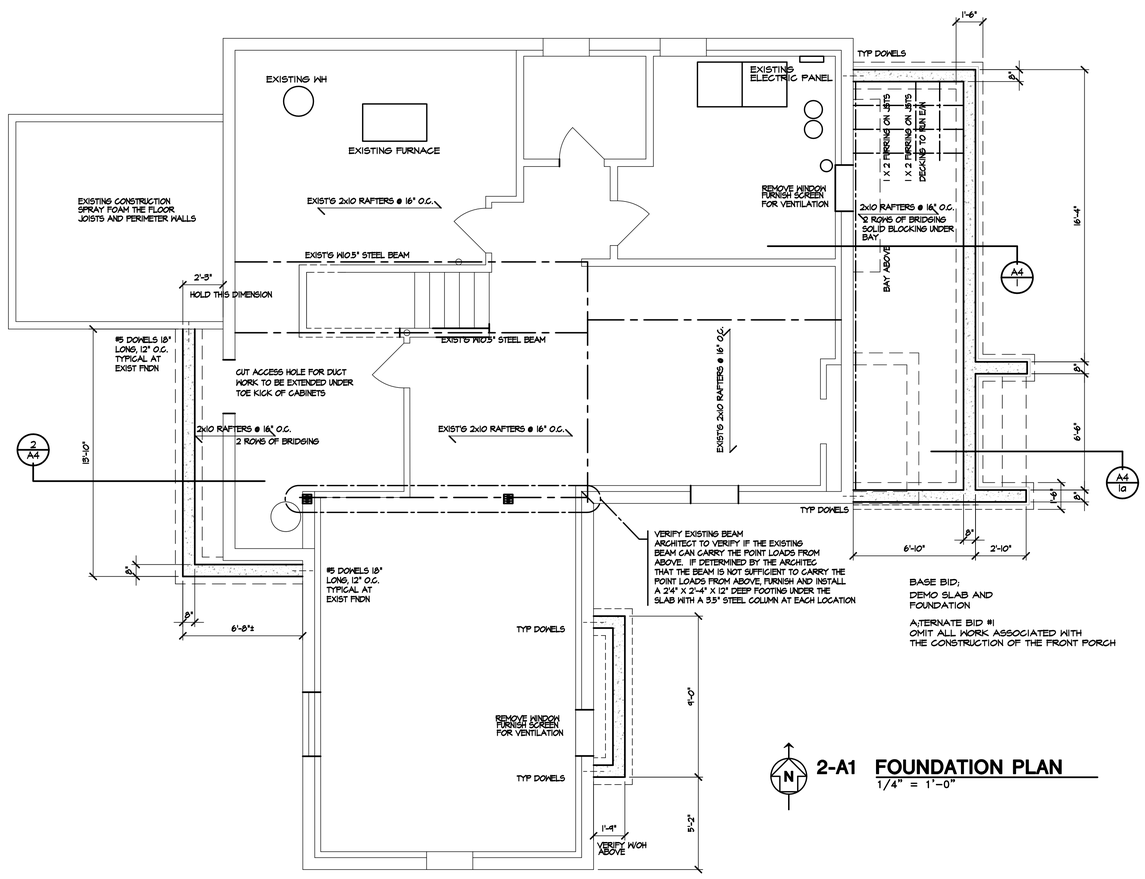

BASE BID;
DEMO SLAB AND FOUNDATION

ALTERNATE BID #1
OMIT ALL WORK ASSOCIATED WITH THE CONSTRUCTION OF THE FRONT PORCH

2-A1 FOUNDATION PLAN
1/4" = 1'-0"

SHEET INDEX:

A1 GENERAL NOTES, BASEMENT FLOOR PLAN, SITE PLAN AND CERTIFICATION
A2 FIRST AND SECOND FLOOR PLAN AND NOTES
A3 EXTERIOR ELEVATIONS
A4 WALLS SECTIONS AND ALTERNATE EAST ELEVATION
E1 ELECTRICAL FIRST AND SECOND FLOOR PLAN

NOTE:

THIS PROJECT IS IN THE HISTORIC DISTRICT AND HAS BEEN REVIEWED AND APPROVED BY THE ARCHITECTURAL REVIEW COMMISSION. ALL DETAILS AND NOTES MUST BE FOLLOWED UNLESS PERMISSION FROM THE ARC HAD BEEN PREVIOUSLY APPROVED. ANY NON-COMPLIANCE OF THE DETAILS OR DESIGN WILL BE CORRECTED AT THE CONTRACTORS EXPENSE. PRIOR TO CONSTRUCTION ALL DETAILS SHOULD BE DISCUSSED WITH THE ARCHITECT TO INSURE ARC COMPLIANCE.

GENERAL NOTES:

DO NOT SCALE DRAWINGS!

THE CONTRACTOR SHALL INSPECT AND VERIFY ALL CONDITIONS AT THE JOB SITE AND REPORT ANY DISCREPENCIES FROM THESE DRAWINGS TO THE ARCHITECT PRIOR TO EXECUTION OF THE WORK IN QUESTION.

THE MEASUREMENTS ON THE DRAWINGS ARE REASONABLE ACCURATE AND BASED ON THE BEST DATA AVAILABLE TO THE ARCHITECT, HOWEVER IN THE EXECUTION OF THE WORK THE CONTRACTOR IS TO VERIFY ALL DIMENSIONS AND CONDITIONS IN FIELD.

THE CONTRACTOR SHALL FURNISH AND INSTALL ALL MATERIALS, EQUIPMENT AND LABOR NECESSARY FOR A COMPLETE PROJECT AS INDICATED ON THE DRAWINGS OR IN THE SPECIFICATIONS.

ANY MATERIAL OR EQUIPMENT NOT SHOWN ON THE DRAWINGS OR INDICATED IN THE SPECIFICATIONS BUT REQUIRED FOR THE COMPLETION OF THE PROJECT, SHALL BE FURNISHED AND INSTALLED AS REQUIRED.

THE PLUMBING, MECHANICAL AND ELECTRICAL WORK SHALL CONFORM TO ALL LOCAL, STATE AND NATIONAL CODES.

ALL CONCRETE WORK TO BE IN ACCORDANCE WITH A.C.I. (3000 PSF MIN COMP. STRENGTH AT 18 DAYS).

ALL FRAMING MEMBERS TO BE DOUGLAS FIR (E = 1,760,000) WITH A MINIMUM BENDING STRESS OF Fb = 1200 PSI.

CONTRACTOR SHALL PROTECT ALL EXISTING CONSTRUCTION TO REMAIN FROM DUST AND DAMAGE DURING THE ENTIRE CONSTRUCTION SCHEDULE.

CERTIFICATION:

I HEREBY CERTIFY THAT THESE DOCUMENTS WERE PREPARED BY ME OR UNDER MY DIRECT SUPERVISION AND THAT TO THE BEST OF MY KNOWLEDGE COMPLY WITH ALL LOCAL AND STATE CODES AND ORDINANCES, OF THE VILLAGE OF BARRINGTON, ILLINOIS.

SEAL

SARAH A. PETERSEN 001-014135

S A PETERSEN ARCHITECT IS A SOLE PROPRIETORSHIP

Revisions:

BASEMENT PLAN
SITE PLAN
CERTIFICATION AND GENERAL NOTES

ADDITION AND REMODEL;
VINSON RESIDENCE
534 S COOK ST
BARRINGTON , ILLINOIS 60010

S. Petersen Architects
83 Carriage Rd. N. Barrington, IL 60010
sapetersenarchitects@gmail.com
CELL PHONE 847-511-0360

Issue Date:
3 SEPTEMBER 2020
Drawn By:
sap
Job Number:
JTV2020

A1

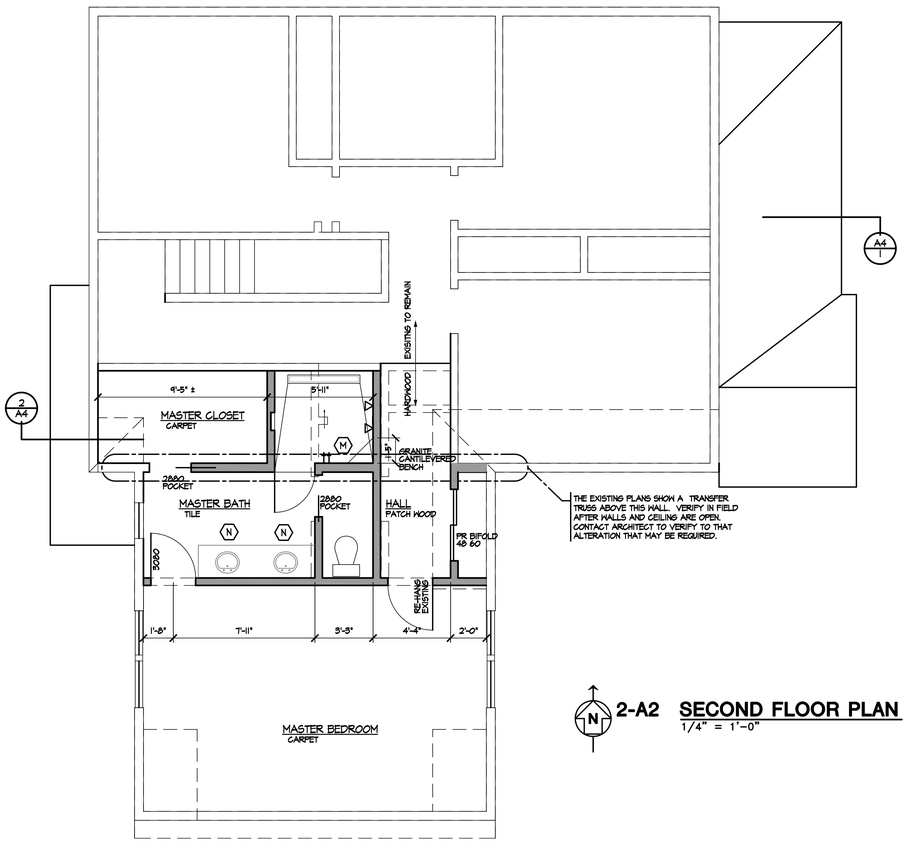

2-A2 SECOND FLOOR PLAN
1/4" = 1'-0"

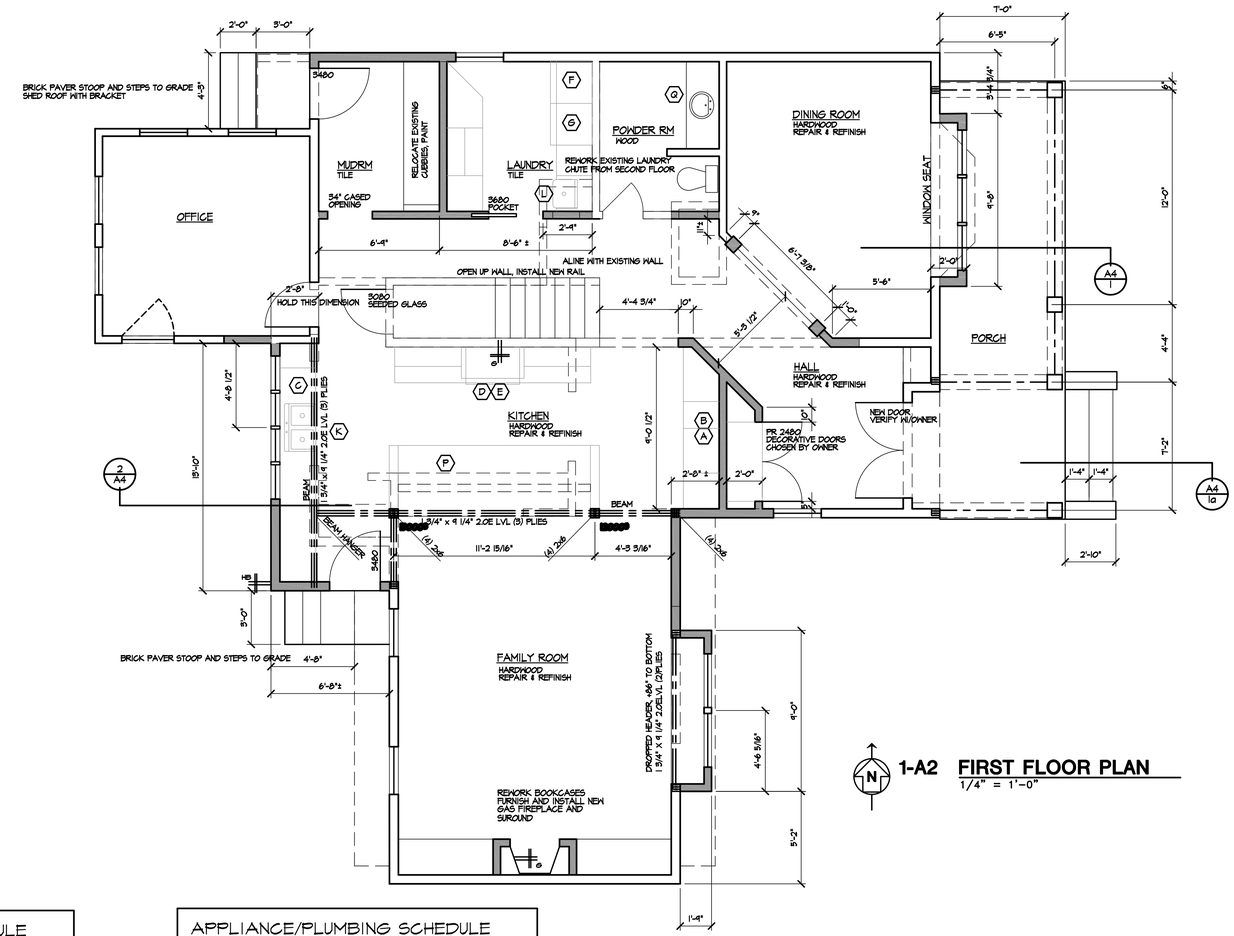

1-A2 FIRST FLOOR PLAN
1/4" = 1'-0"

STRUCTURAL NOTES:

ALL WINDOW HEADERS TO BE (3) 2x12 WITH (2) 1/2" PLYWOOD FLITCH PLATES UNLESS OTHERWISE NOTED.

ALL HEADERS TO INCLUDE 1/2" PLYWOOD FLITCH BETWEEN MEMBERS

ALL INTERIOR HEADERS TO BE (2) 2x12 WITH 1/2" PLYWOOD FLITCH PLATES UNLESS OTHERWISE NOTED.

CONTRACTOR TO PROVIDE SOLID BLOCKING DOWN TO FOUNDATION AT ALL BEAM/LINTEL BEARING CONDITIONS AS SHOWN ON THE PLAN.

PROVIDE BRIDGING AS REQUIRED BY JOIST MANUFACTURER.

PROVIDE DOUBLE FLOOR JOIST UNDER ALL PARALLEL PARTITIONS.

JOIST LAY-OUT IS DIAGRAMATIC ONLY AND THE ACTUAL LAY-OUT/ NUMBERS ARE THE RESPONSIBILITY OF THE CONTRACTOR.

AT FLUSH BEAM FRAMING CONNECTIONS USE HANGERS CAPEABLE OF CARRYING 3,000 POUNDS (A) FOR EACH OPENING

DESIGN LOADS:

ROOF: 15 psf DEAD
30 psf SNOW
FLOOR: 40 psf LIVE FOR ALL ROOMS
60 psf LIVE FOR STAIRWAYS AND EXTERIOR DECKS

WALLS: 20 psf WIND FOR 0-20 FT HEIGHT
25 psf WIND FOR 21-29 FT HEIGHT
30 psf WIND FOR 30 FT AND ABOVE

PLUMBING FIXTURE SCHEDULE

FIXTURE	EXISTING	NEW	TOTAL
TOILET	4	0	4
SINK	8	0	8
TUB/SHOWER	1	0	1
TUB	1	REMOVE	0
SHOWER	3	REMOVE	2
DISHWASHER	1		1
WASH MACHINE	1		1
HOSE BIB	1		1
FREEZER	1	0	1
HUMIDIFIER	1		1
	22 GRAND TOTAL		20

APPLIANCE/PLUMBING SCHEDULE
VERIFY ALL ELEC AND PLUMB'S REQMTS

	FIXTURE	TAG	NOTES
APPLIANCES	FRIDGE	A	
	FREEZER	B	W/ICE MAKER
	DISHWASHER	C	
	RANGE HOOD	D	
	RANGE	E	GAS/220 V
	WASH MACHINE	F	
	DRYER	G	GAS, F & 1 IN-WALL DRYER VENT BOX
	WINE FRIDGE	H	
	MICROWAVE	P	
PLUMBING FIXTURES	TOILET	J	
	SINK	K	DISPOSAL
	SINK B	L	
	SINK C	N	
	SHOWER	M	2 WALL MOUNT SHOWER HEADS TEMP GL SURROUND TRENCH DRAIN
	SINK D	Q	

GENERAL PLUMBING NOTES:

PROVIDE 24" AIR CHAMBERS AT ALL FIXTURES AND RISERS.

VALVE ALL FIXTURES, EQUIPMENT AND APPLIANCES, HORIZONTAL & VERTICAL RUNS, 3/4" DIAMETER

MIN SUPPLY SIZES AND FLOW RATES:

BATH TUB &SHOWER	1/2" D	3.0 G.P.M.
LAVATORIES	1/2" D	3.0 G.P.M.
WATER CLOSET	1/2" D	3.0 G.P.M.

GENERAL PLAN NOTES:

EXISTING WALL TO BE DEMOLISHED. (MOST OF THE DEMO HAS BEEN COMPLETED BY OWNER, VERIFY AMOUNT REQUIRED TO BE COMPLETED IN THE FIELD)

EXISTING WALLS TO REMAIN, FUNISH AND INSTALL INSULATION AND DRYWALL

NEW WALLS, IN KITCHEN AND LAUNDRY ROOM PROVIDE CONT BLOCKING 6" DOWN FROM THE CEILING BETWEEN STUDS FOR CABINETS. SEE CABINET DRAWINGS

3072 DOOR WWHH WW = WIDTH IN INCHES HH = HEIGHT IN INCHES

PROVIDE IN WALL BLOCKING IN ALL BATHROOMS FOR ALL ACCESSORIES, MIRRORS, TOILET PAPER HOLDERS, TOWEL BARS AND CABINETS. VERIFY WITH OWNER TYPE AND LOCATIONS

SHOWER DOOR TO BE TEMPERED

GAS LINE

HB HOSE BIB-FROST PROOF

GENERAL HVAC NOTES:

HVAC CONTRACTOR TO VERIFY LOCATION OF HVAC IN FIELD AND ALTER THE SYSTEM TO ACCOMODATE THE WORK

DUCT JOINT AND SEAMS SHALL BE MADE SUBSTANTIALLY TIGHT.

DUCTS SHALL BE SUPPORTED AT 10' INTERVALS MIN.

SPRINKLER NOTES:

SPRINKLER CONTRACTOR TO VERIFY LOCATION OF SPRINKLER COMPONENTS IN FIELD AND ALTER THE SYSTEM TO ACCOMODATE THE WORK

Revisions:

SECOND FLOOR PLAN
FIRST FLOOR PLAN
GENERAL NOTES

ADDITION AND REMODEL;
VINSON RESIDENCE
534 S COOK ST
BARRINGTON , ILLINOIS 60010

S. Petersen Architects
53 Carriage Rd. N. Barrington, IL 60010
CELL PHONE: 847-571-0348

Issue Date: 3 SEPTEMBER 2020
Drawn By: sap
Job Number: JTV2020

A2

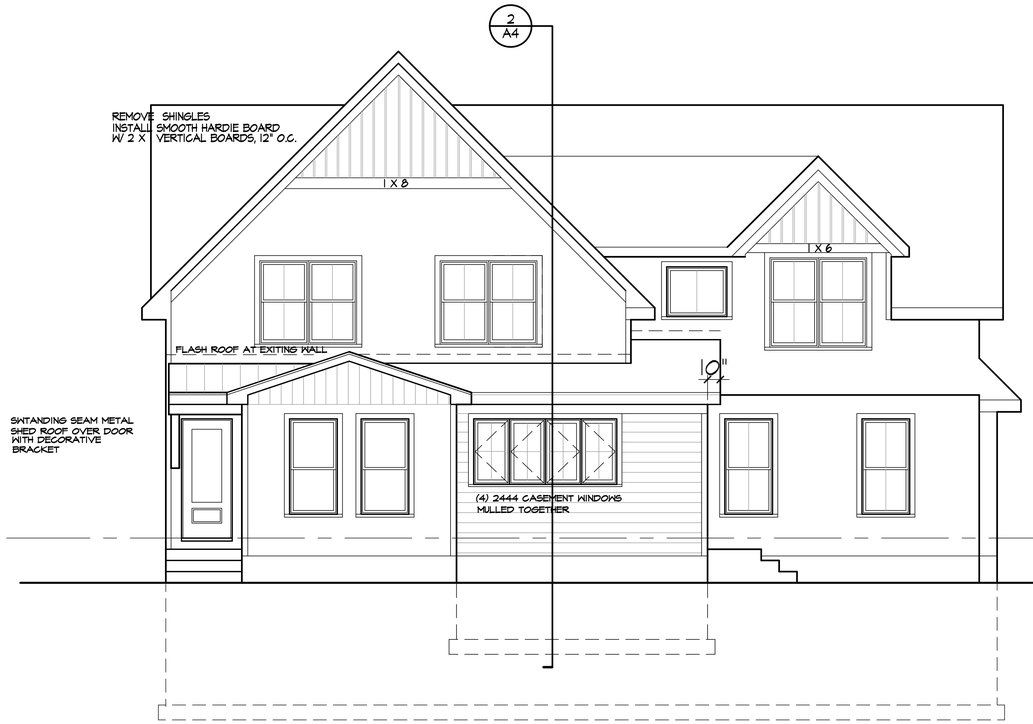

1-A3 WEST EXTERIOR ELEVATION
1/4" = 1'-0"

2-A3 BASE BID; EAST EXTERIOR ELEVATION
1/4" = 1'-0"

3-A3 SOUTH EXTERIOR ELEVATION
1/4" = 1'-0"

4-A3 NORTH EXTERIOR ELEVATION
1/4" = 1'-0"

Revisions:

EXTERIOR ELEVATIONS

ADDITION AND REMODEL;
VINSON RESIDENCE
534 S COOK ST
BARRINGTON , ILLINOIS 60010

S. Petersen Architects
951 Carolina Dr., N. Barrington, IL 60010
[redacted]
CELL PHONE; 847-571-0346

Issue Date:
3 SEPTEMBER 2020
Drawn By:
sap
Job Number:
JTV2020

A3

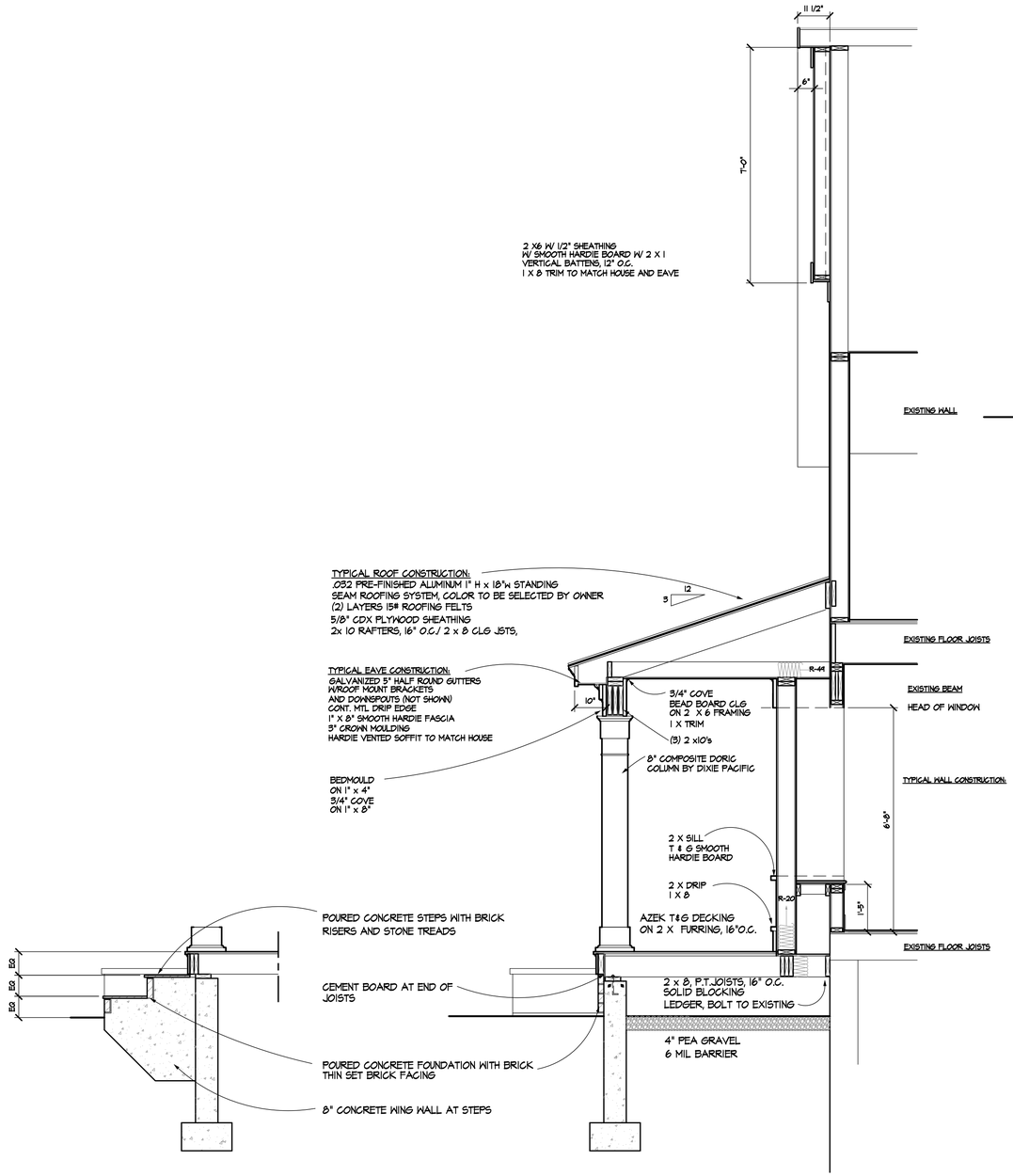

1a-A4 STEP DETAIL
1/2" = 1'-0"

1-A4 PORCH WALL SECTION
1/2" = 1'-0"

3-A3 DEDUCT ALTERNATE BID; EAST EXTERIOR ELEVATION
1/4" = 1'-0"

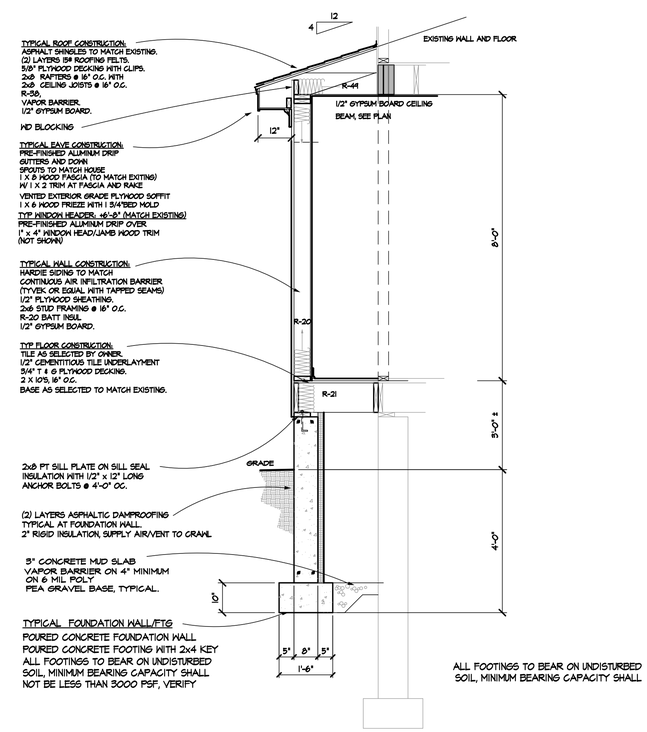

2-A4 KITCHEN WALL SECTION
1/2" = 1'-0"

Revisions:

WALL SECTIONS
ALTERNATE EAST ELEVATION

ADDITION AND REMODEL;
VINSON RESIDENCE
534 S COOK ST
BARRINGTON , ILLINOIS 60010

S. Petersen Architects
93 Carriage Rd. N. Barrington, IL 60010
CELL PHONE; 847-571-0248

Issue Date:
5 SEPTEMBER 2020
Drawn By:
sap
Job Number:
JTV2020

A4

BARRINGTON
Be Inspired.

ARC Memorandum

To: Architectural Review Commission

From: Jennifer Tennant, Assistant Director of Development Services

Subject: ARC 20-24: 234 W. Lincoln Avenue – FINAL DETAILS

Date: September 24, 2020

On September 10, 2020, the ARC approved a Certificate of Appropriateness for modifications to the entrance front entranceway subject to the following conditions:

1.) Provide scaled section detail of the porch and railing
2.) Tongue and groove porch flooring should run perpendicular to the house.
3.) Bottom band board on the skirting should be removed.
4.) Add a post cap to the newel post.
5.) 1-1/8" cove molding under the porch flooring and under each step.
6.) Add spacing between the skirting boards, approx. 5/8" - 1" spacing.
7.) Add a board between the porch floor and the skirting.

The Petitioner has provided a section detail addressing all of the conditions. Staff recommends approval of the proposed final details.

The following documents are attached:

- Approved Plan
- Section Detail

WRIGHT RESIDENCE

234 W Lincoln Ave
Barrington, IL

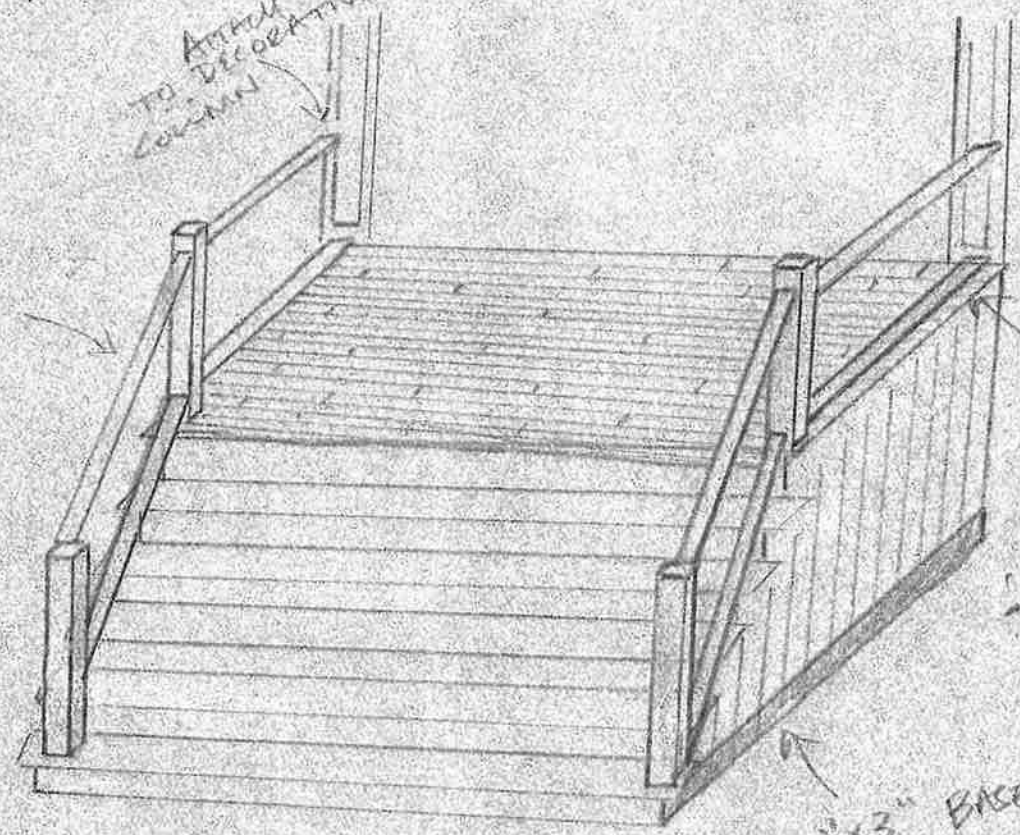

RISER DIM: 7"

STAIRS - 1"x2" W/ 1" OVERHANG OVER RISER & SIDES

TONGUE & GROOVE LANDING, 3 1/2", TREATED PINE

* BALUSTERS NOT SHOWN TO AVOID EXCESS DETAIL

WRIGHT RESIDENCE
234 W. LINCOLN AVE.

SCALE: 1" = 1'

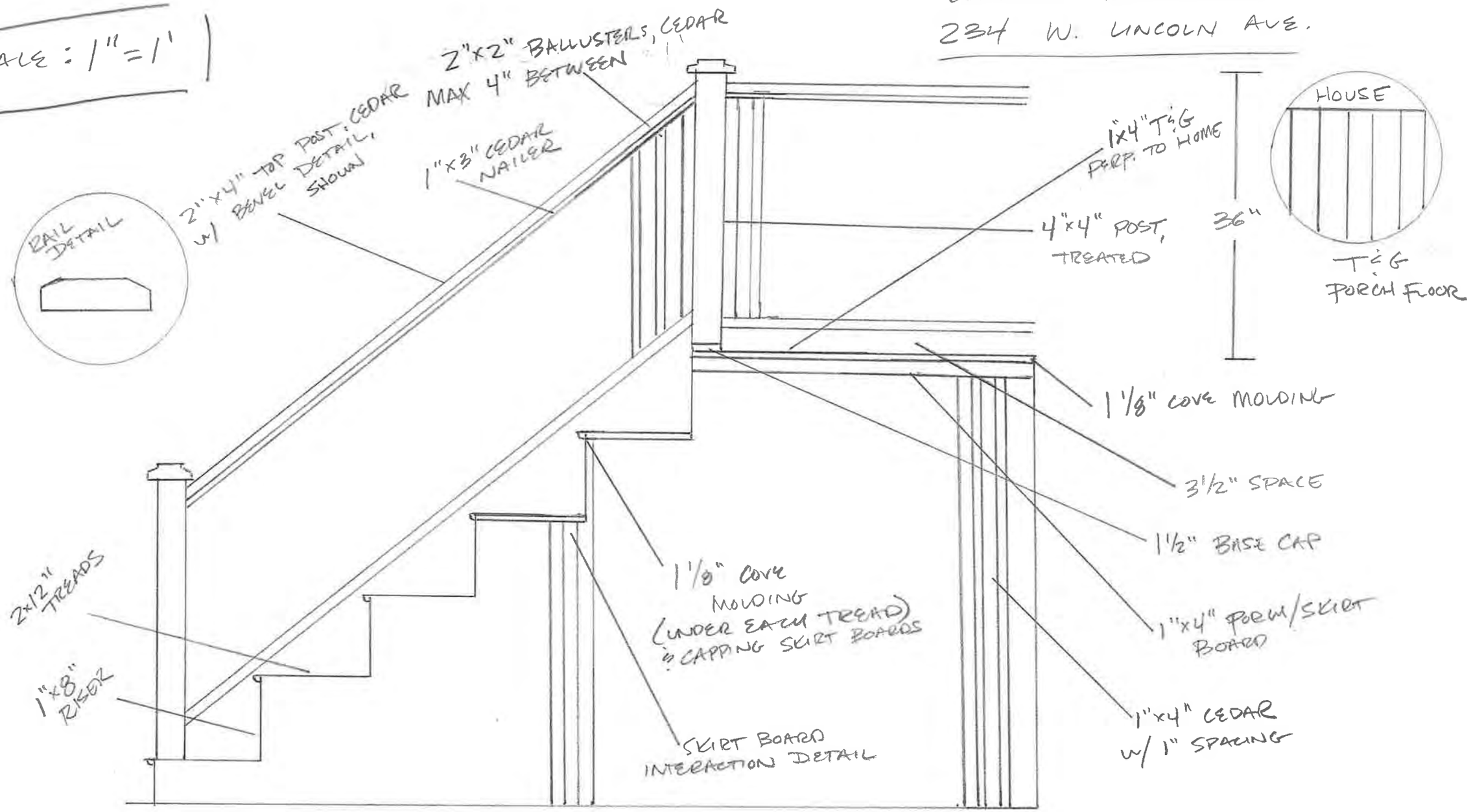

ARCHITECTURAL REVIEW COMMISSION STAFF REPORT

TO:	Architectural Review Commission	**MEETING DATE:**	September 24, 2020 Public Hearing
FROM:	Development Services Department	**PREPARED BY:**	Jennifer Tennant Asst. Director of Development Services

ARC 20-18: 1201-1203 S. Northwest Highway (DSP Honda)

The applicant is seeking approval of a Certificate of Approval for exterior façade modifications to the existing building in the B-1 General Business District.

PROPERTY OWNER: Dobe Agency, LLC
PETITIONER: The Midwest Triumph Corporation of Mundelein
ARCHITECT: CD Group, Construction Design Architects, Ltd. & Construction Design Service, Ltd.

PROJECT DESCRIPTION

The Petitioner is seeking approval of a Certificate of Approval for exterior façade modifications to the existing building in the B-1 General Business District. The Petitioner is proposing to modify the front façade of the building with a corporate branding package for Honda Powersports. The rest of the existing building will be painted gray to complement the corporate color scheme. The Petitioner is concurrently seeking a special use planned development for the adaptive reuse of the property as a Honda Powersports dealership which sells and services motorcycles and other similar vehicles. All plans are subject to a final building, engineering and zoning review and approval prior to the issuance of a building permit.

STAFF RECOMMENDATIONS

The ARC should consider the following items and provide guidance to the Petitioner prior to the final motion relating to ARC 20-18:

1. **The final aluminum entrance door system specification must match the existing aluminum store front system. Product specifications must be provided at the time of permit.**

Motion: If the ARC concurs with Staff's findings, conditions, recommendations and recommended final details, Staff recommends that the Architectural Review Commission adopt these findings as their own and make a motion to recommend approval of ARC 20-18 to the Village Board of Trustees subject to any additional conditions, recommendations or required final details determined by the ARC.

PRELIMINARY REVIEW COMMENTS FROM 7/23/2020

1. **Provide color samples of the gray paint/paneling and red standing seem metal rood.**
   Color information has been provided. This item has been addressed.

2. **Provide a section detail through the new entrance feature.**
   A section detail has been provided. This item has been addressed.

3. **Provide entrance door system specifications.**
   This information was not provided. Staff recommends adding a condition to match the existing aluminum window system. The final specifications must be provided at the time of permit.

FINDING OF FACT

In considering an application for a Certificate of Approval in the B-1 Business District, the Architectural Review Commission shall find that the project complies with the design standards in Section 7.2.I of the Zoning Ordinance. Section 7.2.I of the Zoning Ordinance States:

"The B-1 General Business Service District is intended to promote and preserve small-scale, limited shopping and business uses that serve the needs of the people who live and work in the neighborhoods in which the business uses are located. It is also designed to provide an environment for efficient and attractive shopping center development at a community level scale. It is further intended to provide for carefully regulated establishment of automobile and recreational vehicle sales and service and other establishments that, due to their inherent nature, require careful scrutiny in order to assure that they will not have a detrimental effect on adjacent neighborhoods."

1. **<u>Exterior Wall Materials</u>. The materials used on exterior elevations (excluding doors, windows and roofing materials) shall be limited to:**
   a. **Clay brick (unglazed).**
   b. **Stone (natural).**
   c. **Wood or cementitious siding.**
   d. **Stucco (cementitious material only; no E.I.F.S. [Exterior Insulation Finish Systems]).**

   The existing building is brick with an asphalt mansard roof. The Petitioner is proposing to paint the existing building gray, replace the existing asphalt shingled mansard materials with red standing seam metal material and install a new entrance feature with gray metal cladding. Although metal cladding is not permitted in the B-1 District, the ARC and the Village Board have the authority to approve alternate materials when deemed appropriate for the style of building. Staff finds that a new motorcycle/powersports dealership is a unique use which warrants the review of alternate materials to suit brand specific requirements. Because the Petitioner is redeveloping the existing brick building the project will benefit from a blend of traditional and modern materials. The Plan Commission will also be considering an exception to allow the use of standing seam metal and metal cladding through the planned development process.

2. **<u>Door & Window Materials</u>. No restrictions are placed on door or window materials.**
   The Petitioner is proposing to install a new entrance door to create a more prominent entrance to the building. The specifications for the proposed entrance door system must be provided as part of the final submittal. There are no restrictions on door and/or window materials; however, for consistency and cohesiveness, the new entrance door will be aluminum to match the existing storefront window systems. Staff finds that this standard is met subject to the entrance doors matching the existing store front system and submittal of the system specifications at the time of permit.

3. **<u>Exterior Trim</u>.**

a. **Trim is required for all doors and windows.**
b. **Trim materials shall be limited to wood, stone, cast stone, molded fiberglass or molded high density polymer.**
c. **On masonry buildings, cut stone or pre-cast sills are required for windows; cut stone, pre-cast, or brick lintels are required for doors and windows. Other masonry trim is not required.**

The windows and trim details are all existing. No modifications to existing window or trim details are proposed as part of this project. Staff finds that this standard is not applicable.

4. **<u>Accent Features</u>. Decorative accent features on exterior walls which are subordinate and incidental to the design of the facade shall be limited to wood, stone, cast stone, molded fiberglass or molded high density polymer.**

No accent features are proposed. Staff finds that this standard is not applicable.

5. **<u>Mixed Materials</u>. Materials may be mixed, provided the placement of materials reflects traditional use of such materials, as exemplified below:**
   a. **A wood porch or balcony may be used in combination with stone or brick walls.**
   b. **An extended brick or stone foundation wall may be used in combination with wood walls.**
   c. **A front facade of finished brick or stone may be used in combination with common brick on side and rear walls.**
   d. **A one-story room of wood may project from the main two-story portion of the building made of brick or stone.**
   e. **A fireplace or columns of one material may be combined with walls of another material.**

The Petitioner is proposing to incorporate a new entrance feature with metal panels on the existing brick building along with a new standing seam metal mansard roof to replace the existing asphalt shingles. Given the proposed use of the building as a motorcycle dealership, Staff finds that the use of metal panels is very common for dealership buildings in order to comply with corporate branding standards. The project benefits from the reuse of the existing brick/block building to blend the modern with the traditional. The Plan Commission will also be considering an exception to allow the use of standing seam metal and metal cladding through the planned development process.

6. **<u>Exterior Colors</u>. All colors produced from completely natural materials and unglazed brick shall be permitted. Colors produced through paint or other material coatings shall be restricted.**
   a. **Exterior Wall Colors. Excessively bright or dark colors shall be avoided, and accordingly, the following restrictions shall apply:**
      1) **No color shall be darker than Value 4 in the Munsell color system.**
      2) **No color shall be brighter than Chroma 8 in the Munsell color system.**
      3) **White is permitted; black is not permitted.**
   b. **Trim Material Colors. Colors shall be compatible to and complementary with, the colors used on the exterior walls.**
   c. **The ARC and/or the Board of Trustees may approve alternate colors schemes if deemed appropriate for the style of the building.**

The Petitioner is seeking approval of a red standing seam metal roof in the Honda corporate colors. The ARC and/or Village Board may approve the deviation from the exterior wall colors. Color samples for the red standing seam metal roof and gray metal wall panels have been

provided. The Plan Commission will also be considering an exception to allow the use of the Honda corporate red.

7. <u>Glazed Surface</u>.
   a. **At least forty (40) percent of the first floor of the front and corner side facades shall be glazed. A minimum eighteen (18) inch high knee wall shall be required beneath the glazing.**
   b. **At least thirty (30) percent of upper floor elevations of the front and corner side facades shall be glazed.**
   c. **At least ten (10) percent of interior side elevations shall be glazed surface, unless prohibited by the Building Code.**
   d. **First story glass shall be clear and non-tinted; tinting of the second and third story glass shall not vary by more than twenty (20) percent from the adjacent story. No mirrored glass is permitted.**

   No modifications to the existing glazing percentages are proposed at this time. The storefront system is existing. Staff finds that this standard is not applicable.

8. <u>Roof Design</u>. **Mansard or gambrel roofs are not permitted. If a flat roof design is used, the building shall have a cornice along the top of the building. Buildings on lots immediately adjacent to, or across the street from, a residential district are required to have a hip, gable or other sloping roof.**

   The building currently has a flat roof with an asphalt shingled mansard on the front section of the building only. The flat roof is existing and will remain unchanged. The Petitioner is proposing to replace the asphalt shingled mansard roof materials with red standing seam metal. The rear section of the building that is adjacent to the residential properties has a flat roof design and no modifications to that section of the roof are being proposed. Staff finds that this standard is met.

9. <u>Roof Materials</u>. **For roofs with shingles, only asphalt, fiberglass, wood or slate are permitted.**

   The building has a flat roof. Staff finds that this standard is not applicable.

10. <u>Landscaping</u>. **Landscaping shall conform to the requirements of Chapter 4, Part III (Landscape Regulations).**

    Project landscaping will be reviewed by the Plan Commission as a part of the planned development process to ensure an adequate buffer exists or will be established to meet the requirements of ZO Chapter 4, Part III.

11. <u>Required Plans</u>. **Every application for a building permit shall be accompanied by architectural plans, a site plan and a landscape plan of sufficient detail to show conformance with these Design Standards.**

    The Petitioner has provided architectural plans and renderings documenting the proposed modifications. Staff finds that this standard is met.

12. <u>Interpretation of Design Standards</u>. **A building permit for new construction, an addition or exterior remodeling in this B-1 District shall not be issued unless the Architectural Review Commission has determined that the plans submitted conform to the intent and requirements of these Design Standards and to the Appearance Code located in Appendix H of this**

Ordinance. The Architectural Review Commission and/or Village Board may approve the use of alternate materials if such materials are determined by the Village to be appropriate for the style of building.

In general, Staff finds that the proposed modifications are in conformance with the intent of the B-1 Design Standards and the Appearance Code. It is important to consider that the building is existing and an adaptive reuse of an existing building is being proposed. The ARC should review the proposed use of alternate materials. Staff finds that the proposed materials are consistent with the proposed use and due to the reuse of the existing building there is a unique opportunity to blend traditional materials with modern materials.

STANDARDS FOR APPEARANCE

The purpose of these standards is to establish a designed objective of those items, which affect the physical aspect of the Village of Barrington's environment. Pertinent to appearance is the design of the site, building and structures, planting, street hardware, and miscellaneous other objects which are observed by the public.

These criteria are not intended to restrict imagination, innovation, or variety, but rather to assist in focusing on design principles, which can result in creative solutions that will develop a satisfactory visual appearance within the city, preserve taxable values, and promote the public health, safety and welfare.

The following factors and characteristics which affect the appearance of a development will govern the Architectural Review Commission's evaluation of a design submission: (i) Conformance with the Appearance Code; (ii) Logic of design; (ii) Exterior space utilization; (iii) Architectural character; (iv) Attractiveness; (V) Material selection; (vi) Harmony and compatibility; (vii) Circulation – vehicular and pedestrian; (viii) Maintenance aspects.

1. **RELATIONSHIP OF BUILDINGS TO SITE**

   The primary purpose of this standard is to ensure that the proposed building is designed to accomplish a desirable transition with the streetscape and that the scale of the building is compatible with the site with regards to site planning, mass and scale.

   The proposal seeks to modify the exterior façade of the existing building on Northwest Highway. There are no significant changes proposed relating to site planning. There are no modifications proposed relating to the mass and scale of the existing building. The existing building and site configuration will remain mostly unchanged.

2. **RELATIONSHIP OF BUILDINGS AND SITE TO ADJOINING AREA**

   The primary purpose of this standard is to address the relationship between the proposed site improvements and the surrounding properties as it relates to transitions, landscaping and screening.

   The building is existing as are all site improvements. The site and building will remain largely unchanged except for minor site improvements, a new front building façade and painting of the rest of the building. As part of the planned development process, the landscape transitions between the subject property and the residential property to the north will be reviewed. There are no transition, landscaping or screening requirements between the neighboring commercial properties to the east and west. The property to the west will be controlled by the Petitioner but will not be developed at this time. The property to the east is a vacant gas station building.

3. **LANDSCAPE AND SITE TREATMENT**

The primary purpose of this standard is to address the more technical aspects of landscape design such as topography patterns, grading, plant material, lighting, etc.,

As part of the planned development process, the landscape transitions between the subject property and the residential property to the north will be reviewed. There will be no changes to the grading or topography of the site.

4. **BUILDING DESIGN**

The primary purpose of this standard is to consider the overall building design, compatibility with the neighborhood, building materials, colors, screening of mechanicals, waste receptacles, etc. This standard states that architectural design is not restricted. This standard is explored in more detail above through the B-1 Design Standards.

The Petitioner is proposing to implement a more modern appearance through the implementation of corporate branding component for Honda Powersports. Although there is not a significant amount of commercial development at this end of the Village, the subject property is located on Northwest Highway in the B-1 District which is intended for carefully regulated commercial development including vehicle dealerships. Generally speaking, the architecture along all of Northwest Highway ranges from eclectic to traditional with some buildings being of no particular style and in need updating or enhancement. Staff finds that the reuse of the existing brick/block building provides a unique opportunity to blend traditional and modern materials through an adaptive reuse of an existing building. The building is located at the southern entrance to the Village and the redevelopment of the site will be an enhancement to this entrance point to the Village. The community has indicated through the comprehensive plan survey that Northwest Highway beautification should be a top priority of the Village. While that comes in many forms, investment into and adaptive reuse of existing buildings and properties along this frontage is a significant step towards that goal.

5. **MISCELLANEOUS STRUCTURES AND STREET HARDWARE**

The primary purpose of this standard is to consider the design and compatibility of miscellaneous structures and street lighting.

No modifications are proposed to these elements at this time.

6. **MAINTENANCE – PLANNING AND DESIGN FACTORS**

The primary purpose of this standard is to consider future maintenance of the proposed development.

Staff finds that the Petitioner has selected materials that will require minimal maintenance and that are compatible with the nature of the use of the building.

Village of Barrington
Attn: Jennifer Tennant, AICP
200 S. Hough Street
Barrington, IL

Dear Members of the Architectural Review Commission and Plan Commission:

The purpose of this letter is to explain our operation and scope of the project being presented for your consideration located at 1201-1203 South Northwest Highway.

The Midwest Triumph Corporation Of Mundelein DBA: Des Plaines Honda has been in operation since 1983 at its present location located at 550 E. Northwest Hwy in Des Plaines, Illinois. We are a full service single line level 4 Honda Powerhouse dealership that sells, services and finances new Honda motorcycles, scooters, all terrain vehicle (ATV), utility task vehicle (MUV) and personal watercraft (PWC) as well as offering a fully stocked parts, accessory and apparel department. We also have a full service department that services most makes and models of powersport products.

In addition to selling and servicing new Honda powersport products, Des Plaines Honda has become one of Chicagolands leading dealerships for pre-owned powersports vehicles. Our selection of pre-owned vehicles are always extremely clean and fully serviced.

Des Plaines Honda's current retail location is a 2-story 8000 sq. ft masonry building with the upstairs (4000 sq ft) designated to sales, finance, administration, parts, accessories and apparel departments that our customers access through the front entrance facing Northwest Hwy. We estimate that 85% of our daily customer access is through the main entrance. The downstairs (4000 sq ft) is designated to the service department in which customers access through a staircase located in the northeast corner of the facility or a service entrance which is located in the rear of the building. We estimate that 15% of our daily customer access is through the service entrance. Due to the size of our current facility and nature of the products we sell and service, it is our policy to secure all powersport products that fit into our current facility on a nightly basis by bringing the units into the dealership. This means daily both on the upper level and lower level we push in and out approx 60 units to create flow and work space. We also have a 9000 sq ft warehouse for additional storage.

(Rev. 8/11/20)

550 East Northwest Highway • Des Plaines, Illinois 60016
847.699.9600 • Fax: 847.699.9653 • www.dsphonda.com

In the proposed location at 1201-1203 S. Northwest Hwy in Barrington we see a number of improvements from our current location and operations. The proposed location is a 17,638 sq ft single level masonry building that provides us with access to allow for the majority of all powersport products we currently sell to be displayed, stored and serviced indoors. It also allows us to eliminate our off site warehouse facility and have everything in one location. This will allow us to enhance our customer service by being able to schedule our drivers for more pickup and deliveries. The majority if not all of the customer access and activity will be conducted from the front of the facility. All customers shopping or taking delivery of a new or used vehicle, parts, accessories and apparel will be directed to front main or west side entrance. Service Customers will access the service department through the east overhead or man door in which they will be greeted by our service writers. The majority of the vehicles in service will remain indoors until complete and the customers schedules delivery or picks the unit up. Due to the nature of the products we sell and service our policy will remain unchanged as to securing all powersport products in our possession, which means there will be no powersport vehicles stored outside.

Des Plaines Honda's hours of operations are broken down into Summer and Winter Hours. Our Summer Hours (April thru September) are typically Monday thru Friday 10:00 a.m to 7:00 p.m and Saturday 9:00 a.m to 5:00 p.m. Our Winter Hours (October thru March) are typically Tuesday thru Friday 10:00 a.m to 6:00 p.m and Saturday 9:00 a.m to 5:00 p.m

We currently employ 14 Full-Time employee's year round and a additional 4-6 Seasonal Employee's from April thru August on average. The dealership operates with between 10 and 12 employee's daily (September thru March) and 14-16 employee's daily (April – August)

Des Plaines Honda's has been all about customer satisfaction and customer experience as long as I can remember. Des Plaines Honda is a member of Garage Composites and participates in 20 clubs, management training courses and employee training programs.

We also offer our customers benefits such as: VIP Membership Programs, Three Years Prepaid Maintenance, Priority Service, Discounts, Service Loaners, Pick up, Delivery, Winter storage and Much more.

In order to support our customer expectations and our Service Schedules we own and operate 1 Sprinter Van, 2 Pick up Trucks, 3 Motorcycles and 3 Trailers which are used almost daily to Pickup and Delivery customer units.

The existing 17,638 SF single story masonry building located at 1201-1203 S. Northwest Hwy in Barrington shall be remodeled to house the new tenant and use the current zoning listed as B-1 general business district. We understand the tenant DSP Honda applicant: The Midwest Triumph Corporation of Mundelein, Mr. Jeff McLennan as President is seeking approval of his Honda Powersports Dealership. The new facility shall house sales, executive offices, parts, accessories and service department.

The existing footprint of the building is not changing. The site paving area will be repaved and expanded on the west side and in the rear yard per current engineering drawings.

Certain plans submitted along with this cover letter shall depict the specific scope of work for the interior. The exterior shall be upgraded to include a new front façade / elevation. The existing mansard roof shall be reclad in the "Honda" red to match Panatone 186C standing seam metal roofing. A new front entry structure constructed of metal panels and branded signage over the new pair of doors. The remainder of the masonry building shall be painted in Benjamin Moore Shadow Gray BM2125-40 paint to match the typical Honda standards.

The front of the building, under the roof overhang soffit can lights will be replaced with Juno 6" RLD G3 07LM LED retrofit trims. (See Attached) and existing wall sconces will have screw in LED bulbs. The rear fixtures will be replaced with Lumark WP AXCS5A 52 watt LED fixture (See Attached) which the photometrics show that at 50 feet from building the foot candles are 0.2 and 0.0 at the property line.

The existing windows, trim and doors shall remain as they are in good condition.

Existing overhead doors shall be painted for the service entrance on the east and a new motorcycle delivery area on the west side of the front elevation.

The existing roof top HVAC units appear to be set back for enough to provide for minimal site line from Northwest Highway.

The landscaping generally shall be cleaned up to remove overgrown and dead buckthorns and weeds as well as installing a new brick retaining wall to replace the existing railroad ties on the west and rear side of the building. The front yard area shall be improved to include two vehicle display areas located on the east and west entries, sod, steel edging and #6 grade gravel shall be placed to establish a fixed spot to display product.

The existing large billboard sign on the west property line will be removed within a 180 days of November 30, 2024 which is the current expiration date of the lease with Eller Media Company dated September 15, 1999.

(Rev. 8/11/20)

The existing monument sign in the front of the building in the area near the parkway shall be remodeled to comply with the Honda standards. The sign design is shown on exhibit A100.

The property to the west known as 1997-1999 S. Northwest Hwy will become a maintained open field at this time. We will be removing the structure in the back northeast corner, removing debris, removing dead buckthorns and weeds along east side of property and trimming existing hedges to 6 feet along front of property.

In conclusion, Thank You for your consideration of this request. We look forward to a new beginning in Barrington and many years of successful business relations with the Village and other outstanding business in the community.

Sincerely,

Jeff McLennan

(Rev. 8/11/2020)

JUNO

Project:

Fixture Type:

Location:

Contact/Phone:

6″ BASICS SERIES™ LED RETROFIT BAFFLE TRIM

DOWNLIGHT RETROFIT FOR STANDARD 6″ RECESSED HOUSINGS

6RLD G3 07LM

AIR-LOC ENERGY STAR Wet Location TITLE 24 PART 6

PRODUCT DESCRIPTION

Energy efficient LED retrofit module fits into standard 6″ IC or non-IC recessed housings • Replaces 65W incandescent lamp, producing over 700 lumens • Dimmable with most standard incandescent, magnetic low voltage and electronic low voltage dimmers • LED retrofit module is designed to provide 50,000 hours of life • 5 year warranty

PRODUCT SPECIFICATIONS

LED Downlight Retrofit Trim Cast aluminum trim with white baffle and flange • All-in-one design where LED light engine mounts directly to trim for ease of installation into existing 6″ recessed housings with medium base sockets • Provided with torsion springs.

LED Light Engine LEDs are mounted directly to cast aluminum housing providing superior thermal management to ensure long life • 2700K, 3000K, and 3500K LED color temperature • 90 CRI minimum • Accommodates 120 volts AC at 60Hz • Dimmable with most standard incandescent, magnetic low voltage and electronic low voltage dimmers • For a list of compatible dimmers, see JUNORETROBASICS-DIM.

Electrical Connections Trim features quick connect plug installed as standard for installation into IC23 LEDT24 and IC23R LEDT24 housings with mating connector • Trim ships with a medium base socket adapter whip for installation into 6″ incandescent housings with medium base sockets.

Trim Cast aluminum baffle trim with white finish • Ships without E26 screw base socket adapter with L/SKTWHIP option • Diffusing lens conceals the LEDs from direct view and provides uniform aperture luminance.

Life Rated for 50,000 hours at 70% lumen maintenance.

Labels ENERGY STAR® Certified • Certified to the high efficacy requirements of California T24 • UL and cUL classified for use with most standard UL listed 6″ recessed incandescent housings and Juno IC23 LEDT24 and IC23R LEDT24; see below for specific compatibility requirements • Damp location • Suitable for wet locations (indoor covered ceilings).

Testing All reports are based on published industry procedures; field performance may differ from laboratory performance.

Specifications subject to change without notice.

INSTALLATION

The LED retrofit baffle trim is provided with torsion springs as standard. Accessory kit available for use in housings that do not have torsion spring retaining brackets.

COMPATIBLE HOUSINGS

The 6RLD retrofit module is compatible with most 6″ recessed housings measuring at least 4″ high with an inside diameter between 5-3/4″ and 7″. Removal of the housing socket plate or socket mounting bracket may be required in order for the trim to fit properly.

Compatible housings include, but not limited to:

Juno housings: IC2, IC21, IC22, IC23 and TC2 Series

Juno quick-connect LED housings: IC23 LEDT24 and IC23R LEDT24

VuLite® housings: V6IC and V6TC Series

Lithonia® housings: L7X and LC6 Series

Halo® housings: H7 Series, H25 Series

Thomas® housings: PS1 and PS3 Series

Capri® housings: CR1, PR1, QL6 Series, P9ASIC Series

DIMENSIONS

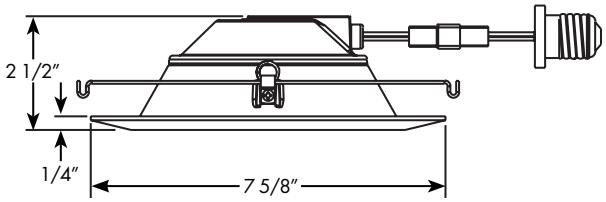

PERFORMANCE DATA

	27K	30K	35K
Input Voltage	120V	120V	120V
Input Power Typical	10W	10W	10W
Frequency	60Hz	60Hz	60Hz
EMI/RFI	FCC Title 47, Part 15 Class B (consumer)	FCC Title 47, Part 15 Class B (consumer)	FCC Title 47, Part 15 Class B (consumer)
Minimum starting temp	-30°C (-22°F)	-30°C (-22°F)	-30°C (-22°F)
CRI	90 min.	90 min.	90 min.
CCT	2700K	3000K	3500K

ACCESSORIES

V6RLTRB
Torsion receiver bracket kit to install into housings that do not have torsion receiver brackets.

LEDRETROWHIP
Replacement E26 screw base adapter for installation into incandescent housings.

 ©2017-2019 Acuity Brands Lighting, Inc.

6" BASICS SERIES™ LED RETROFIT BAFFLE TRIM

DOWNLIGHT RETROFIT FOR STANDARD 6" RECESSED HOUSINGS

6RLD G3 07LM

ORDERING INFORMATION

Ordering Example: 6RLD G3 07LM 27K 90CRI 120 FRPC WWH

Trim Series	Generation	Lumens	Color Temperature	Color Rendering Index	Voltage
6RLD 6" Juno Basics Retrofit Downlight	**G3** Generation 3	**07LM** 700 Nominal Lumens	**27K** 2700K **30K** 3000K **35K** 3500K	**90CRI** 90+ CRI	**120** 120V

Driver	Finish	Options
FRPC Forward/Reverse Phase Cut	**WWH** White, White Trim Ring	**L/SKTWHIP**[1] Less Socket Whip E26 screw base adapter not included

Notes:
1 Required for shipments to California when ordering 27K.

 ©2017-2019 Acuity Brands Lighting, Inc.

6″ BASICS SERIES™
LED RETROFIT BAFFLE TRIM

DOWNLIGHT RETROFIT FOR STANDARD 6″ RECESSED HOUSINGS

6RLD G3 07LM

PHOTOMETRICS

Distribution Curve **Distribution Data** **Coefficient of Utilization** **Illuminance Data at 30″ Above Floor for a Single Luminaire**

6RLD G3 07LM 27K, 2700K LEDs, input watts: 10, delivered lumens: 728, LM/W = 73, test no. PT10161403R, tested in accordance to IESNA LM-79.

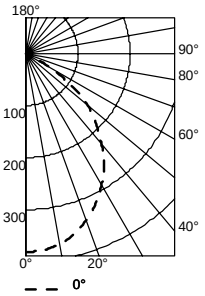

CP Summary

	0°
0°	381
5°	379
15°	359
25°	318
35°	260
45°	191
55°	106
65°	24
75°	12
85°	3
90	0

Coefficients of Utilization

pf	20%								
pc	80%			70%			50%		
pw	70%	50%	30%	50%	30%	10%	50%	30%	10%
RCR 0	119	119	119	116	116	116	111	111	111
1	111	108	104	105	102	100	101	99	97
2	103	97	91	95	90	86	91	87	84
3	96	87	80	86	79	74	83	77	73
4	89	79	71	77	70	65	75	69	64
5	82	71	64	70	63	58	68	62	57
6	77	65	57	64	57	51	62	56	51
7	72	60	52	59	51	46	57	51	46
8	67	55	47	54	47	42	53	46	41
9	63	51	43	50	43	38	49	42	38
10	59	47	40	46	39	35	45	39	35

Zonal Lumen Summary

Zone	Lumens	% Lamp	% Fixture
0°- 30°	283	38.9	38.9
0°- 40°	445	61.1	61.1
0°- 60°	685	94.1	94.1
0°- 90°	728	100.0	100.0
90°- 180°	0	0.0	0.0
0°- 180°	728	100.0	100.0

6RLD G3 07LM 30K, 3000K LEDs, input watts: 10, delivered lumens: 761, LM/W = 76, test no. PT10161403R, tested in accordance to IESNA LM-79.

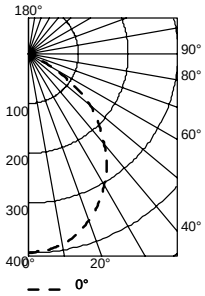

CP Summary

	0°
0°	398
5°	396
15°	375
25°	332
35°	272
45°	200
55°	111
65°	25
75°	12
85°	3
90	0

Coefficients of Utilization

pf	20%								
pc	80%			70%			50%		
pw	70%	50%	30%	50%	30%	10%	50%	30%	10%
RCR 0	119	119	119	116	116	116	111	111	111
1	111	108	104	105	102	100	101	99	97
2	103	97	91	95	90	86	91	87	84
3	96	87	80	86	79	74	83	77	73
4	89	79	71	77	70	65	75	69	64
5	82	71	64	70	63	58	68	62	57
6	77	65	57	64	57	51	62	56	51
7	72	60	52	59	51	46	57	51	46
8	67	55	47	54	47	42	53	46	41
9	63	51	43	50	43	38	49	42	38
10	59	47	40	46	39	35	45	39	35

Zonal Lumen Summary

Zone	Lumens	% Lamp	% Fixture
0°- 30°	296	38.9	38.9
0°- 40°	465	61.1	61.1
0°- 60°	716	94.1	94.1
0°- 90°	761	100.0	100.0
90°- 180°	0	0.0	0.0
0°- 180°	761	100.0	100.0

6RLD G3 07LM 35K, 3500K LEDs, input watts: 10, delivered lumens: 795, LM/W = 80, test no. PT10161403R, tested in accordance to IESNA LM-79.

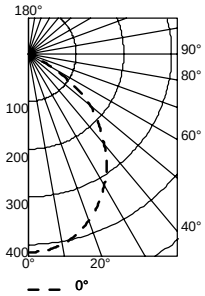

CP Summary

	0°
0°	416
5°	414
15°	392
25°	347
35°	284
45°	209
55°	116
65°	26
75°	13
85°	3
90	0

Coefficients of Utilization

pf	20%								
pc	80%			70%			50%		
pw	70%	50%	30%	50%	30%	10%	50%	30%	10%
RCR 0	119	119	119	116	116	116	111	111	111
1	111	108	104	105	102	100	101	99	97
2	103	97	91	95	90	86	91	87	84
3	96	87	80	86	79	74	83	77	73
4	89	79	71	77	70	65	75	69	64
5	82	71	64	70	63	58	68	62	57
6	77	65	57	64	57	51	62	56	51
7	72	60	52	59	51	46	57	51	46
8	67	55	47	54	47	42	53	46	41
9	63	51	43	50	43	38	49	42	38
10	59	47	40	46	39	35	45	39	35

Zonal Lumen Summary

Zone	Lumens	% Lamp	% Fixture
0°- 30°	309	38.9	38.9
0°- 40°	486	61.1	61.1
0°- 60°	748	94.1	94.1
0°- 90°	795	100.0	100.0
90°- 180°	0	0.0	0.0
0°- 180°	795	100.0	100.0

 ©2017-2019 Acuity Brands Lighting, Inc.

Lumark

DESCRIPTION

The Lumark Axcent LED wall mount luminaire provides a flush-mounted, architectural design with high performing, energy-efficient illumination resulting in up to 95% energy and maintenance savings over traditional sources. The die-cast aluminum construction along with stainless steel hardware, gasketed housing, and sealed optical compartment make the Axcent impervious to contaminants. The Axcent replaces 70W to 450W metal halide equivalents making it ideal for pathway illumination, building entrances, vehicle ramps, schools, tunnels, stairways, loading docks and floodlighting applications.

Catalog #		**Type**
Project		
Comments		**Date**
Prepared by		

SPECIFICATION FEATURES

Construction
Low-profile LED design with rugged die-cast aluminum housing. Matching housing styles incorporate both a full cutoff and refractive lens design. External fin design on the back of the fixture extracts heat from the surface resulting in a thermally optimize design for longer luminaire life. One-piece silicone gasket seals the fixture, keeping out moisture and dusts in compliance with IP66 rating. The fixture is 3G vibration rated (ANSI C136.31) and UL/cUL listed ensuring reliability and durability in wall mount applications.

Optical
Silicone-sealed optical LED chamber incorporates a custom engineered reflector providing high-efficiency illumination. Refractive lens models incorporate a molded lens assembly designed for maximum forward throw. Optional glare free lens is available for visual comfort at reduced lumen values. Available in Type IV distribution with lumen packages ranging from 1,800 to 17,300 nominal lumens. Light engine configurations consist of high-efficiency, discrete LEDs mounted to metal-core circuit boards to maximize heat dissipation and promote long life. Offered in standard 4000K (+/- 275K) CCT and minimum 70 CRI. Optional 5000K CCT / 70CRI min and 3000K / 80CRI min are available.

Electrical
LED driver is mounted to the die-cast aluminum housing for optimal heat sinking. Integral LED electronic driver incorporates 6kV surge protection. Class 1 electronic drivers have a power factor >90% and THD<20%. 120-277V 50/60Hz standard operation with optional 347V 60Hz or 480V 60Hz options available. 480V is compatible for use with 480V Wye systems only. 0-10V dimming driver is standard with leads external to the fixture to accommodate controls capability such a dimming and occupancy. 10kV/10kA surge protection option is available.

Mounting
Steel wedge mounting plate fits directly to 4" standard j-box or directly to wall with the "Hook-N-Lock" mechanism for quick installation. Secure with two captive, corrosion resistant, stainless steel set screws, which are concealed but accessible from bottom of fixture. Optional floodlight kits available in slipfitter, knuckle and trunnion mount configurations. Optional pole mount configuration provides a quick-mount solution to round and square poles. The easy installation arm accommodates multiple drill patterns ranging from 1-1/2" to 4-7/8".

Emergency Egress
Optional integral cold weather battery emergency egress includes emergency operation test switch, an AC-ON indicator light and a premium, maintenance-free battery pack. The separate emergency lighting LEDs are wired to provided redundant emergency lighting. Listed to UL Standard 924, Emergency Lighting.

Finish
The Axcent is protected with five state super TGIC polyester powder coat paint in carbon bronze and five other color finishes. Super TGIC power coat paint finishes withstand extreme climate conditions while providing optimal color and gloss retention of the installed life.

Warranty
Five-year warranty.

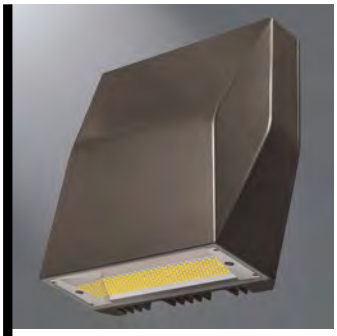

AXCS / AXCL
AXCENT

14-123W

LED

APPLICATIONS:
WALL / SURFACE / INVERTED FLOODLIGHTING / PATHWAY / SITE LIGHTING

DIMENSIONS

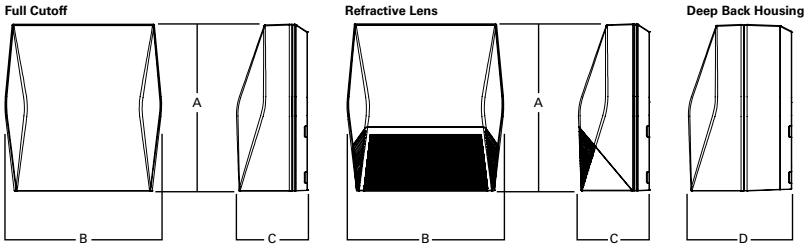

Dimensional Data

	AXCS Small	AXCL Large
A	8" [202mm]	11-1/2" [292mm]
B	7-1/2" [190mm]	10-3/4" [273mm]
C	3-5/8" [94mm]	4-7/8" [124mm]
D	6-1/8" [155mm]	7-1/8" [181mm]

CERTIFICATION DATA
3G Vibration Rated
Dark Sky Approved (Fixed mount, Full cutoff, and 3000K CCT only)
DesignLights Consortium® Qualified*
FCC Class A
IP66 Rated
ISO9001, UL/cUL Wet Location Listed
ROHS Compliant
Title 24 Compliant
UL924 Listed (CBP Models)

TECHNICAL DATA
-40°C Minimum Ambient Temperature
+40°C Maximum Ambient Temperature
External Supply Wiring 90°C Minimum

SHIPPING DATA:
Approximate Net Weight:
Small fixture=5 lbs. [2.36 kgs.]
Small with sensor or CBP=10 lbs. [4.40 kgs.]
Large fixture=12 lbs. [5.45 kgs.]
Large with sensor or CBP=17 lbs. [7.73 kgs.]
Large with sensor & CBP=21 lbs. [9.54 kgs.]

COOPER Lighting Solutions

*www.designlights.org

MOUNTING OPTIONS

Slipfitter Mount (Small)
Tenon OD: 2-3/8" | EPA: 0.60

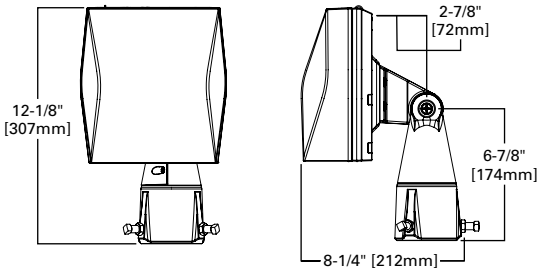

Knuckle Mount (Small)

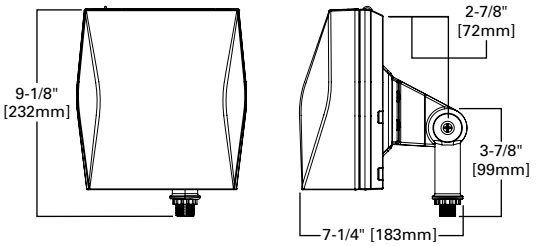

Trunnion Mount (Small)

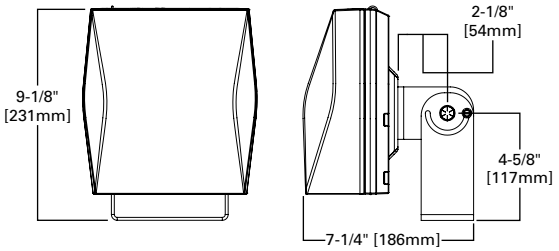

Slipfitter Mount (Large)
Tenon OD: 2-3/8" to 2-7/8" | EPA: 1.10

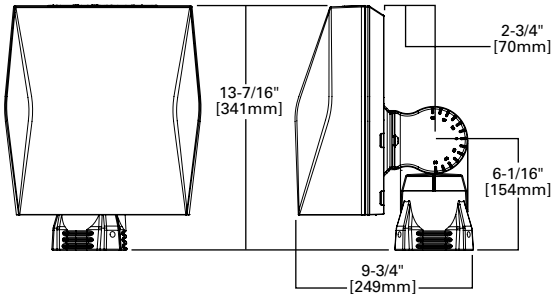

Trunnion Mount (Large)

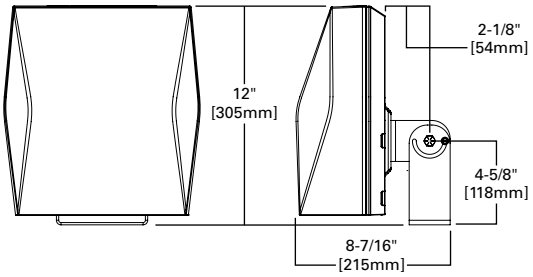

Pole Mount Arm (Shown with Large fixture)
EPA: 1.1

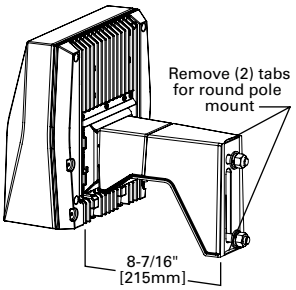

Drill Pattern

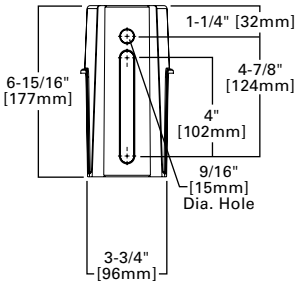

Trunnion Mount Detail

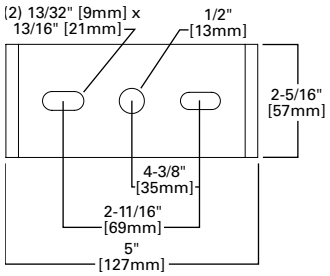

Through-branch Wiring (Available through rated junction box - supplied by others)

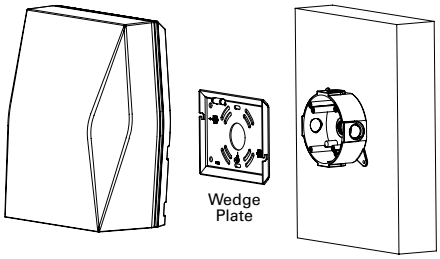

Wall Mount Plate Detail (Small)

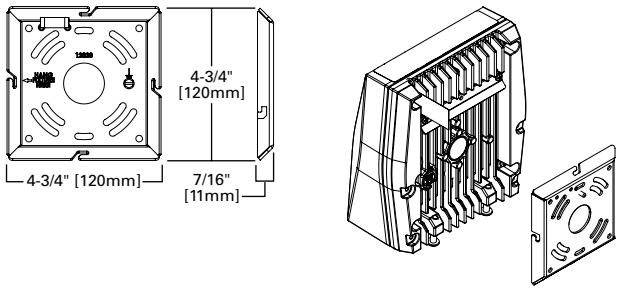

Wall Mount Plate Detail (Large)

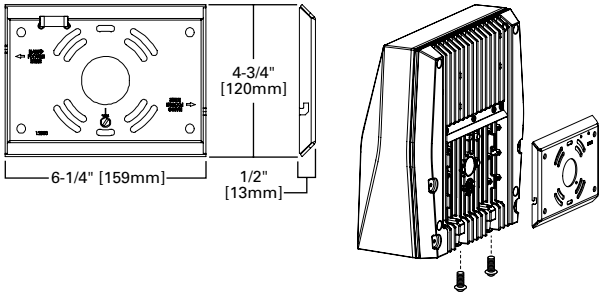

CONTROL OPTIONS

LumaWatt Pro Sensor

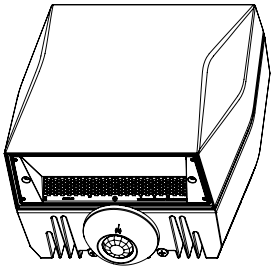

Occupancy Sensor

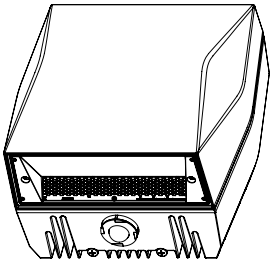

Button Photocontrol

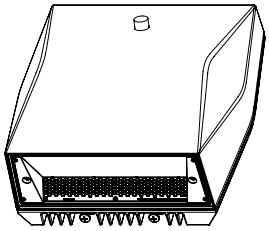

VANDAL SHIELD AND WIRE GUARD OPTIONS

Vandal Shield

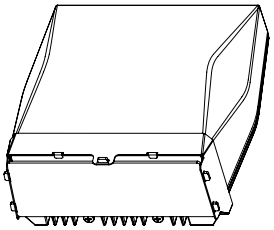

Wire Guard

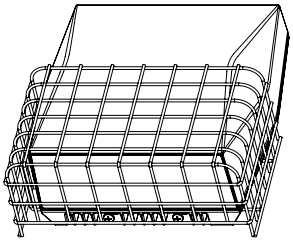

CONTROL OPTIONS

0-10V
This fixture is offered standard with 0-10V dimming driver(s) for use with a lighting control panel or other control method.

Photocontrol (PC1, PC2, and PC)
Optional button-type photocontrol provides a flexible solution to enable “dusk-to-dawn” lighting by sensing light levels.

After Hours Dim (AHD)
This feature allows photocontrol-enabled luminaires to achieve additional energy savings by dimming during scheduled portions of the night. The dimming profile will automatically take effect after a “dusk-to-dawn” period has been calculated from the photocontrol input. Specify the desired dimming profile for a simple, factory-shipped dimming solution requiring no external control wiring. Reference the After Hours Dim supplemental guide for additional information.

Dimming Occupancy Sensor (MSP/DIM-LXX and MSP-LXX)
These sensors are factory installed in the luminaire housing. When the MSP/DIM-LXX sensor option is selected, the occupancy sensor is connected to a dimming driver and the entire luminaire dims when there is no activity detected. When activity is detected, the luminaire returns to full light output. The MSP/DIM sensor is factory preset to dim down to approximately 50 percent power with a time delay of ten minutes. The MSP-LXX sensor is factory preset to turn the luminaire off after five minutes of no activity.

These occupancy sensors includes an integrated photocell that can be activated with the ISHH-01 accessory for “dusk-to-dawn” control or daylight harvesting - the factory preset is ON. The ISHH-01 is a wireless tool utilized for changing the dimming level, time delay, sensitivity and other parameters.

A variety of sensor lens are available to optimize the coverage pattern for mounting heights from 8’-30’.

For mounting heights from 12' to 30' (-L30)

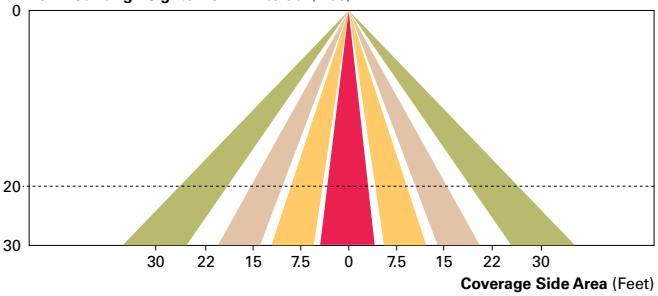

For mounting heights from 8' to 12' (-L12)

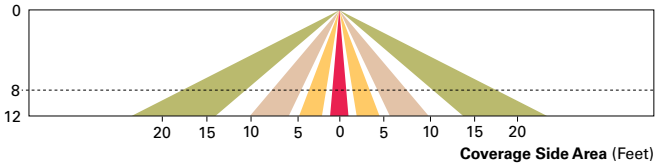

LumaWatt Pro Wireless Control and Monitoring System (LWR-LW and LWR-LN)
The LumaWatt Pro system is a peer-to-peer wireless network of luminaire-integral sensors for any sized project. Each sensor is capable of motion and photo sensing, metering power consumption and wireless communication. The end-user can securely create and manage sensor profiles with browser-based management software. The software will automatically broadcast to the sensors via wireless gateways for zone-based and individual luminaire control. The LumaWatt Pro software provides smart building solutions by utilizing the sensor to provide easy-to-use dashboard and analytic capabilities such as improved energy savings, traffic flow analysis, building management software integration and more.

For additional details, refer to the LumaWatt Pro product guides.

For mounting heights from 8' to 16' (LWR-LW)

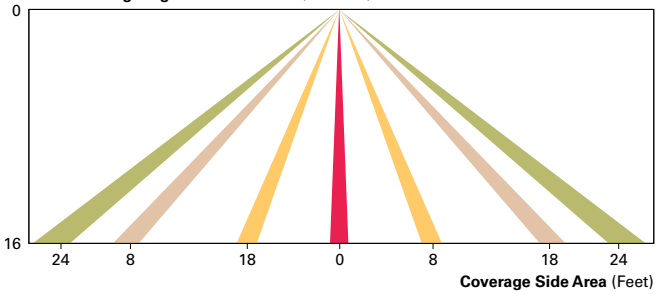

For mounting heights from 16' to 40' (LWR-LN)

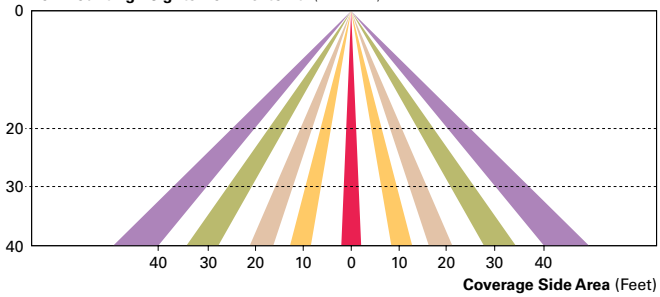

POWER AND LUMENS (AXCENT SMALL)

Light Engine		AXCS1A	AXCS2A	AXCS3A	AXCS4A	AXCS5A
Power (Watts)		14	21	27	44	52
Input Current @ 120V (A)		0.12	0.18	0.23	0.37	0.43
Input Current @ 240V (A)		0.06	0.09	0.11	0.18	0.22
Input Current @ 277V (A)		0.05	0.08	0.10	0.16	0.19
Input Current @ 347V (A)		0.04	0.06	0.08	0.13	0.15
Input Current @ 480V (A)		0.03	0.04	0.06	0.09	0.11
Configuration						
Full Cutoff	4000K/5000K Lumens	1,806	2,561	3,537	5,520	6,300
	3000K Lumens	1,526	2,164	2,989	4,665	5,324
	BUG Rating	B1-U0-G0	B1-U0-G0	B1-U0-G0	B2-U0-G1	B2-U0-G1
Refractive Lens	4000K/5000K Lumens	1,915	2,716	3,704	5,858	6,699
	3000K Lumens	1,618	2,295	3,130	4,950	5,661
	BUG Rating	B1-U3-G2	B1-U3-G2	B1-U3-G2	B1-U4-G3	B1-U4-G3

POWER AND LUMENS (AXCENT LARGE)

Light Engine		AXCL6A	AXCL8A	AXCL10A	AXCL12A
Power (Watts)		56	72	102	123
Input Current @ 120V (A)		0.44	0.60	0.83	1.01
Input Current @ 240V (A)		0.22	0.31	0.41	0.51
Input Current @ 277V (A)		0.20	0.27	0.36	0.45
Input Current @ 347V (A)		0.17	0.22	0.30	0.37
Input Current @ 480V (A)		0.13	0.16	0.22	0.27
Configuration					
Full Cutoff	4000K Lumens	7,594	9,696	13,283	16,823
	5000K Rating	7,465	9,531	13,058	16,538
	3000K Lumens	6,619	8,450	11,577	14,662
	BUG Rating	B1-U0-G1	B1-U0-G1	B3-U0-G2	B3-U0-G2
Refractive Lens	4000K Lumens	7,809	9,970	13,641	17,346
	5000K Rating	7,689	9,817	13,450	17,034
	3000K Lumens	6,817	8,704	11,924	15,102
	BUG Rating	B1-U4-G4	B2-U5-G5	B2-U5-G5	B2-U5-G5

LUMEN MAINTENANCE (AXCENT SMALL)

Ambient Temperature	TM-21 Lumen Maintenance (72,000 Hours)	Theoretical L70 (72,000 Hours)
Up to 3A		
25°C	90%	246,000
40°C	90%	225,000
50°C	89%	195,000
Up to 5A		
25°C	89%	240,000
40°C	88%	223,000
50°C	87%	186,000

LUMEN MAINTENANCE (AXCENT LARGE)

Ambient Temperature	TM-21 Lumen Maintenance (72,000 Hours)	Theoretical L70 (72,000 Hours)
Up to 8A		
25°C	94%	556,000
40°C	94%	556,000
50°C	92%	340,000
Up to 10A		
25°C	94%	556,000
40°C	94%	478,000
50°C	87%	207,000
Up to 12A		
25°C	94%	151,000
40°C	81%	125,000

LUMEN MULTIPLIER

Ambient Temperature	Lumen Multiplier
10°C	1.02
15°C	1.01
25°C	1.00
40°C	0.97

POWER AND LUMENS (SMALL + CBP)

Light Engine		AXCS1A	AXCS2A	AXCS3A	AXCS4A
Power (Watts)		18	25	31	48
Input Current @ 120V (A)		0.15	0.21	0.26	0.40
Input Current @ 240V (A)		0.08	0.11	0.13	0.20
Input Current @ 277V (A)		0.07	0.09	0.11	0.18
Configuration					
Full Cutoff	4000K/5000K Lumens	629	587	647	570
	3000K Lumens	531	496	547	482
Refractive Lens	4000K/5000K Lumens	667	623	686	605
	3000K Lumens	563	526	580	511

Note: Power and current based on full power consumption while CBP is charging. Lumen outputs are while operating in emergency mode only.

POWER AND LUMENS (LARGE + CBP)

Light Engine		AXCL6A	AXCL8A	AXCL10A
Power (Watts)		81	97	127
Input Current @ 120V (A)		0.65	0.81	1.04
Input Current @ 240V (A)		0.33	0.41	0.52
Input Current @ 277V (A)		0.29	0.36	0.45
Configuration				
Full Cutoff	4000K/5000K Lumens	1,340		
	3000K Lumens	1,168		
Refractive Lens	4000K/5000K Lumens	1,380		
	3000K Lumens	1,203		

Note: Power and current based on full power consumption while CBP is charging. Lumen outputs are while operating in emergency mode only.

ORDERING INFORMATION

Sample Number: AXCS1A-AP-347V

Model Series [1]	LED Color Temperature	Color	Options (Add as Suffix)
Full Cutoff **AXCS1A**=14W **AXCS2A**=21W **AXCS3A**=27W **AXCS4A**=44W **AXCS5A**=52W **AXCL6A**=56W **AXCL8A**=72W **AXCL10A**=102W **AXCL12A**=123W **Refractive Lens** **AXCS1ARL**=14W **AXCS2ARL**=21W **AXCS3ARL**=27W **AXCS4ARL**=44W **AXCS5ARL**=52W **AXCL6ARL**=56W **AXCL8ARL**=72W **AXCL10ARL**=102W **AXCL12ARL**=123W	**[Blank]**=4000K, Neutral **C**=5000K, Cool **W**=3000K, Warm	**[Blank]**=Carbon Bronze (Standard) **WT**=Summit White **BK**=Black **AP**=Grey **GM**=Graphite Metallic **DP**=Dark Platinum	**347V**=347V [2] **480V**=480V [2] **PC1**=Photocontrol 120V [3, 4, 5] **PC2**=Photocontrol 208-277V, 347V, 480V [4, 5, 6] **PC**=Photocontrol 120-277V, 347V, 480V [4, 7, 8] **KKIT**=Knuckle Floodlight Mount [7] **TRNKIT**=Trunnion Floodlight Mount **SFKIT**=Slipfitter Floodlight Mount **PMAKIT**=Pole Mount Arm **LWR-LW**=LumaWatt Pro Wireless Sensor, Wide Lens for 8' - 16' Mounting Height [4, 9] **LWR-LN**=LumaWatt Pro Wireless Sensor, Narrow Lens for 16' - 40' Mounting Height [4, 9] **MSP/DIM-L12**=Integrated Sensor for Dimming Operation, 8' - 12' Mounting Height [4, 9, 10] **MSP/DIM-L30**=Integrated Sensor for Dimming Operation, 12' - 30' Mounting Height [4, 9, 10] **MSP-L12**=Integrated Sensor for ON/OFF Operation, 8' - 12' Mounting Height [4, 9, 10] **MSP-L30**=Integrated Sensor for ON/OFF Operation, 12' - 30' Mounting Height [4, 9, 10] **CBP**=Cold Weather Battery Pack [3, 11, 12, 13, 14, 15] **10K**=10kV/10kA Surge Protection **HA**=50°C High Ambient [12, 16] **GRF**=Glare Reducing Lens [17] **AHD145**=After Hours Dim, 5 Hours [5, 18] **AHD245**=After Hours Dim, 6 Hours [5, 18] **AHD255**=After Hours Dim, 7 Hours [5, 18] **AHD355**=After Hours Dim, 8 Hours [5, 18]

Accessories (Order Separately) [19]

VS/AXCS=Vandal Shield Axcent Small [7, 20]
VS/AXCS-MS=Vandal Shield Axcent Small (With Motion Sensor) [7, 20]
WG/AXCS=Wire Guard Axcent Small [7]
WG/AXCS-MS=Wire Guard Axcent Small (With Motion Sensor) [7]
VS/AXCL=Vandal Shield Axcent Large [5, 20]
VS/AXCL-MS=Vandal Shield Axcent (With Motion Sensor) [5, 20]
WG/AXCL=Wire Guard Axcent Large [5]
WG/AXCL-MS=Wire Guard Axcent (With Motion Sensor) [5]
KKIT/AXCS-XX=Knuckle and Visor Floodlight Kit (For Axcent Small) [7]
SFKIT/AXCS-XX=Slipfitter Floodlight Kit (For Axcent Small) [7]
TRNKIT/AXCS-XX=Trunnion and Visor Floodlight Kit (For Axcent Small) [7]
TRNKIT-XX=Trunnion Floodlight Kit (For Axcent Large) [5]
SFKIT-XX=Slipfitter Floodlight Kit (For Axcent Large) [5]
PMAKIT-XX=Pole Mount Kit
ISHH-01=Integrated Sensor Programming Remote [21]
MA1010-XX=Single Tenon Adapter for 3-1/2" O.D. Tenon
MA1011-XX=2@180° Tenon Adapter for 3-1/2" O.D. Tenon
MA1017-XX=Single Tenon Adapter for 2-3/8" O.D. Tenon
MA1018-XX=2@180° Tenon Adapter for 2-3/8" O.D. Tenon

NOTES:
1. DesignLights Consortium® Qualified. Refer to www.designlights.org Qualified Products List under Family Models for details.
2. Transformer used only when ordered with motion sensor or AXCS1 through AXCS5 or AXCL6 fixture wattages.
3. Not available in 347 or 480 VAC.
4. Button photocontrol and any motion sensor not offered together.
5. Only available on AXCL6-AXCL12 models.
6. Used with 277, 347, and 480 VAC options.
7. Only available on AXCS1-AXCS5 models.
8. This configuration may contain materials that are not RoHS compliant. Contact your lighting representative for more information.
9. Uses deep back housing.
10. The ISHH-01 accessory is required to adjust parameters.
11. Ambient operating temperature -20°C to 25°C for AXCL6 through AXCL10. Ambient operating temperature -20°C to 30°C on AXCS4 models. Ambient operating temperature -20°C to 40°C on AXCS1 through AXCS3 models.
12. Not available with AXCS5 or AXCL12 models.
13. Uses deep back housing for AXCS1, AXCLS2, AXCS3, and AXCS4 models.
14. Not to be mounted in upwards / inverted orientation. Downlight wall mount only for AXCS1 through AXCS4.
15. In AXCS1, AXCS2, AXCS3, and AXCS4 models, CBP cannot be used with any sensor option (PC, MSP, LWR).
16. Can not be ordered with CBP or PC options.
17. Use dedicated IES files on product website for lumen values and distributions.
18. Requires the use of PC1 or PC2 button photocontrol. See After Hours Dim supplemental guide for additional information.
19. Replace XX with color designation.
20. For use with full cutoff lens configurations only.
21. This tool enables adjustment to parameters including high and low modes, sensitivity, time delay, cutoff and more. Consult you lighting representative for more information.

STOCK ORDERING INFORMATION

Model Series [1]			
Full Cutoff		**Refractive Lens**	
AXCS1A=14W	**AXCL10A**=102W	**AXCS1ARL**=14W	**AXCL10ARL**=102W
AXCS2A=21W	**AXCL12A**=123W	**AXCS2ARL**=21W	**AXCL12ARL**=123W
AXCS3A=27W	**AXCL6A-347V**=56W	**AXCS3ARL**=27W	**AXCL6ARL-347V**=56W
AXCS4A=44W	**AXCL8A-347V**=72W	**AXCS4ARL**=44W	**AXCL8ARL-347V**=72W
AXCS5A=52W	**AXCL10A-347V**=102W	**AXCS5ARL**=52W	**AXCL10ARL-347V**=102W
AXCL6A=56W	**AXCL12A-347V**=123W	**AXCL6ARL**=56W	**AXCL12ARL-347V**=123W
AXCL8A=72W		**AXCL8ARL**=72W	

NOTES:
1. All stock configuations are 4000K color temperatures, standard Carbon Bronze finish, and wall mount configuration.

COOPER Lighting

Photometric Toolbox

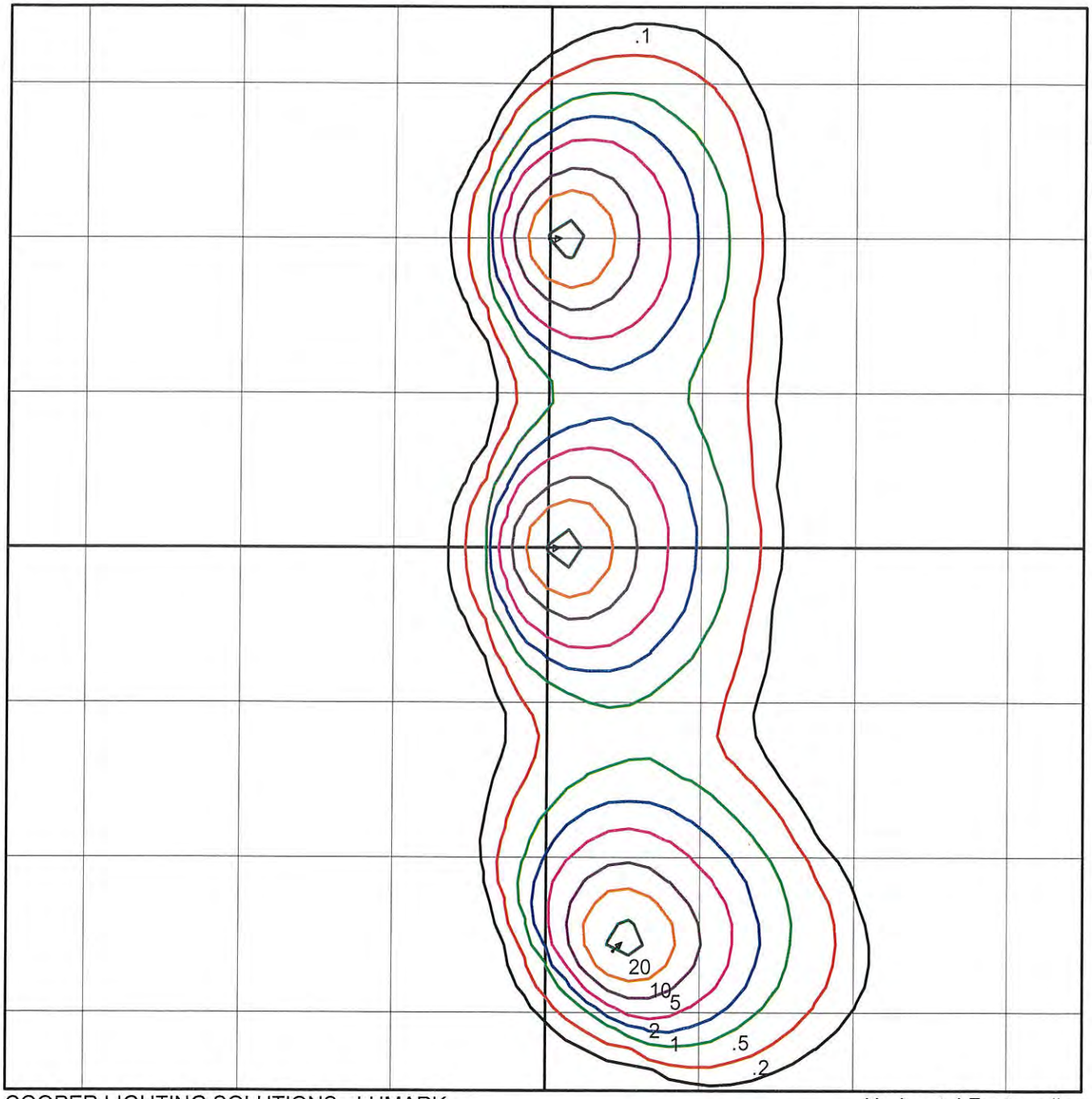

COOPER LIGHTING SOLUTIONS - LUMARK
(FORMERLY EATON)
AXCS5A
5A AXCENT SMALL LED WALLPACK WITH 4000K CCT
AND 70 CRI LEDS

Horizontal Footcandles
Scale: 1 Inch = 25 Ft.
Light Loss Factor = 1.00
Lumens Per Lamp = N.A. (absolute photometry)
Luminaire Lumens = 6300
Mounting Height = 10.00 Ft
Maximum Calculated Value = 23.85 Fc
Arrangement: Specify_Location(s)

Photometric Toolbox Professional Edition - Copyright 2002-2011 by Lighting Analysts, Inc.
Calculations based on published IES Methods and recommendations.
Results derived from content of manufacturers photometric file.

PHOTOMETRIC FILENAME : AXCS5A.IES

DESCRIPTIVE INFORMATION (From Photometric File)

COOPER LIGHTING SOLUTIONS - LUMARK
(FORMERLY EATON)
AXCS5A
5A AXCENT SMALL LED WALLPACK WITH 4000K CCT
AND 70 CRI LEDS

TEMPLATE SPECIFICATION

Horizontal Footcandles
Scale: 1 Inch = 25 Ft.
Light Loss Factor = 1.00
Lumens Per Lamp = N.A. (absolute photometry)
Luminaire Lumens = 6300
Mounting Height = 10.00 Ft
Maximum Calculated Value = 23.85 Fc
Arrangement: Specify_Location(s)

LUMINAIRE LAYOUT INFORMATION

#	X	Y	Z	Orient	Tilt	Roll	Spin	Tilt Correction
1	0.00	50.00	10.00	0.00	0.00	0.00	0.00	1.00
2	0.00	0.00	10.00	0.00	0.00	0.00	0.00	1.00
3	11.00	-65.00	10.00	45.00	0.00	0.00	0.00	1.00

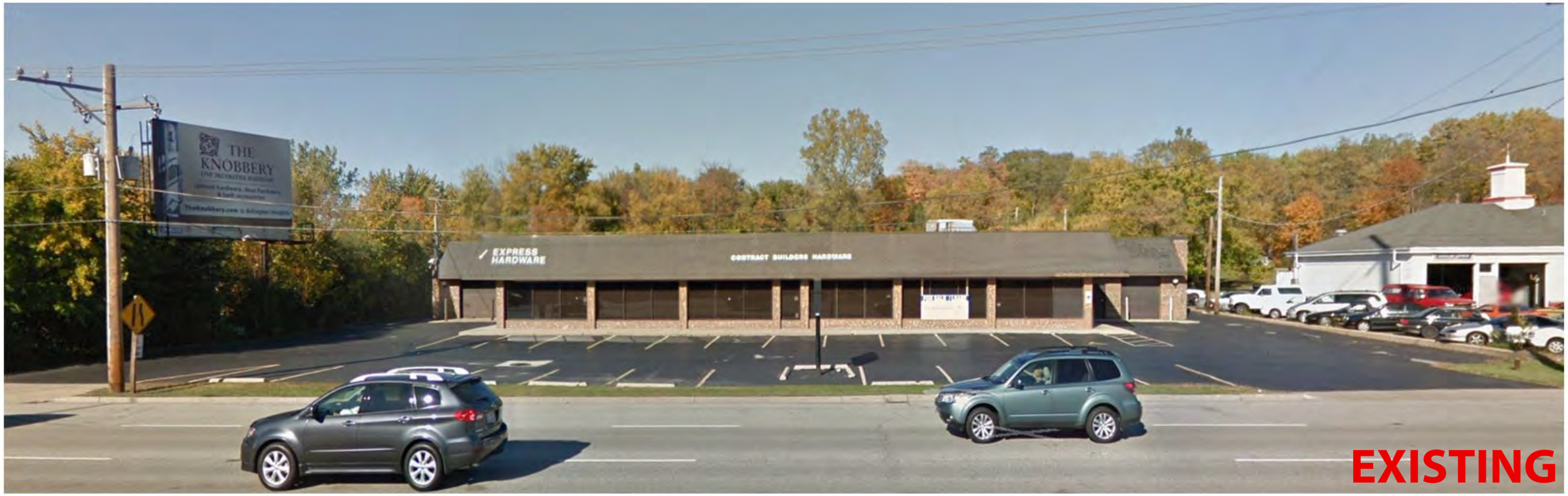
THE
KNOBBERY
EXPRESS
HARDWARE
CONTRACT BUILDERS HARDWARE
EXISTING

HONDA
DSP HONDA
PROPOSED

1203

FACTORY DIRECT OUTLET
GUN & AMMO STORE
ARMS
BARRINGTON | USARMS.COM
6 MILES AHEAD, RIGHT ON PEPPER RD.

ELECTRICAL
ROOM

Sign location:

Square feet: 25.93

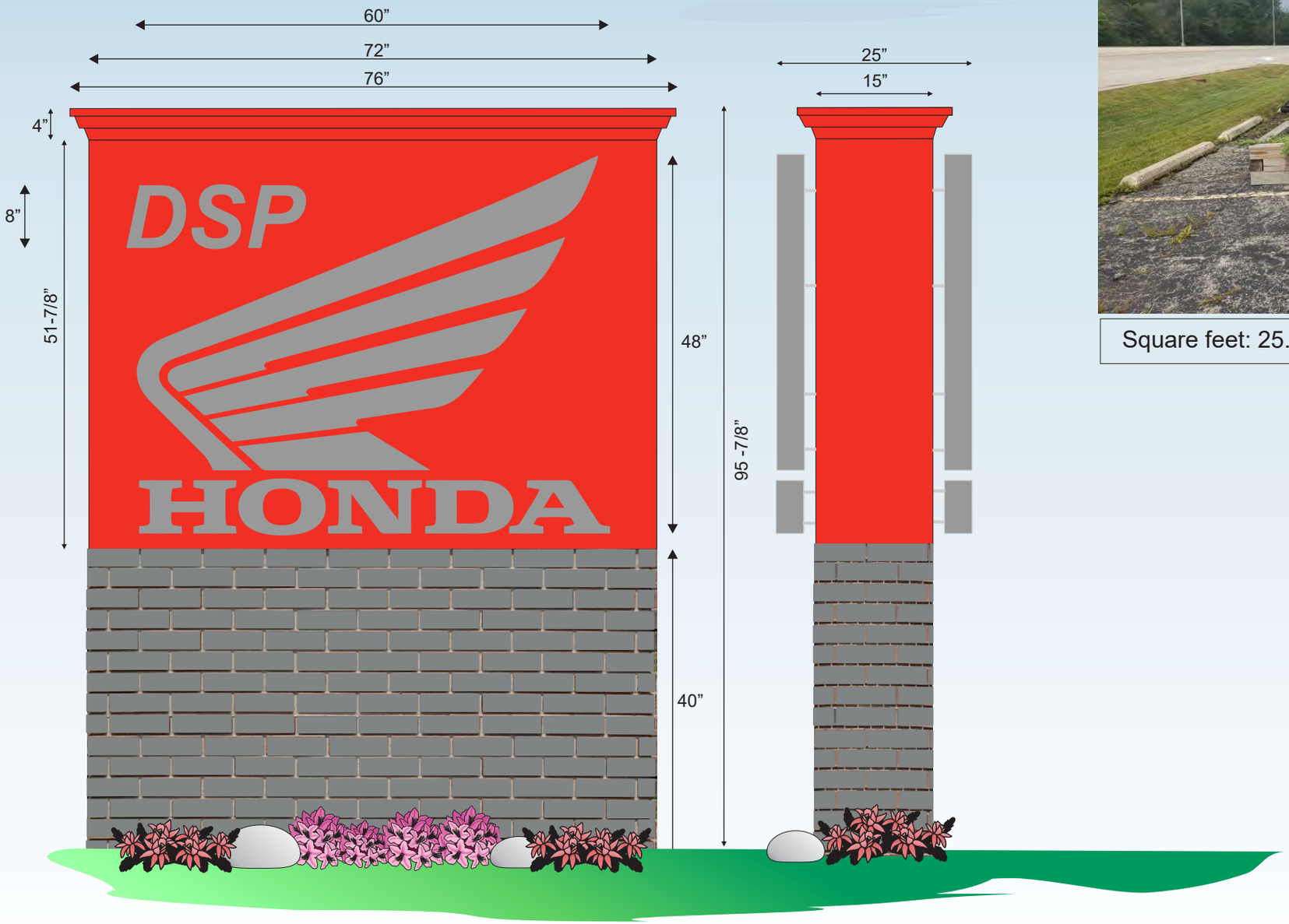

All letters to be back-lit
stainless steel channel letters

Colors:

Red

Silver

Drawn By: Bryana Schramer	Scale: Not to scale
Job Name: Honda	Job Address: 1201 S Northwest Hwy
Date:	Date: 08/28/2020
Customer Approval:	Approved as submitted / Approved as noted / See notes resubmit
	Signature

BRIGHT LIGHT Sign
310 Telser Road
Lake Zurich, IL 60047
Tel. 847-550-8902
Fax 847-550-6383
Email: sales@brightlightsign.com

Double-Sided Exterior Signs - Pylon Sign poles by others

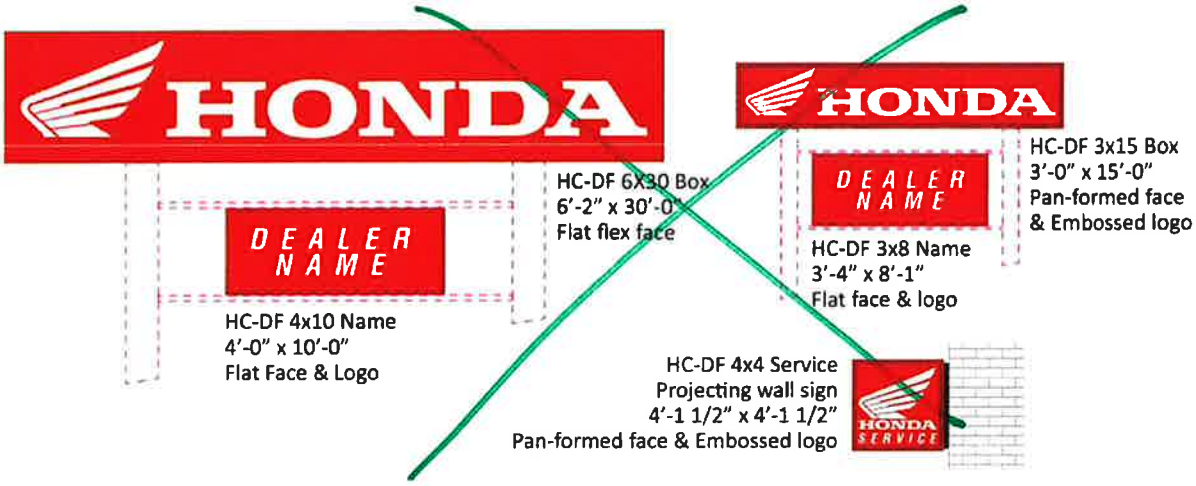

Single-Sided Exterior Wall Signs

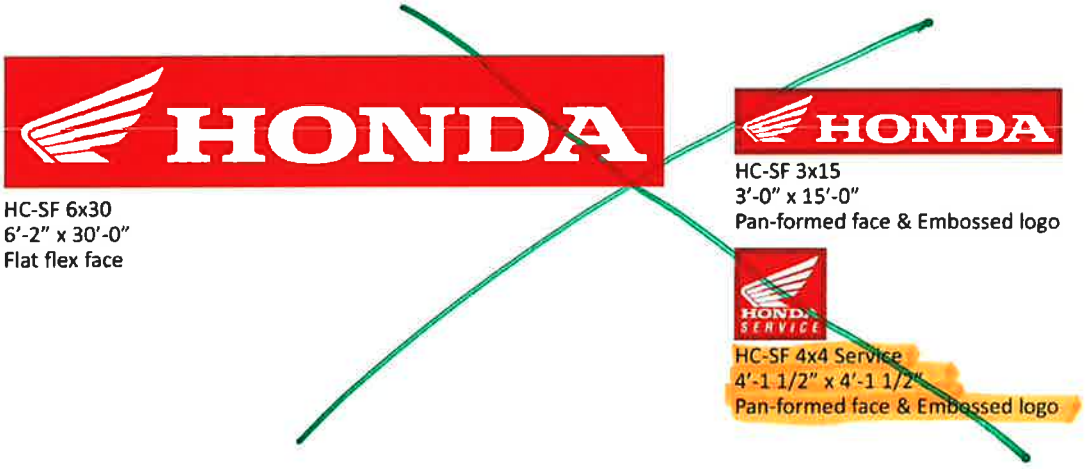

Channel Letters

HC-4'-8" x 30' Channel Letters
4'-8 5/16" x 30'-0" illuminated channel letters
& logo on rider system.

HC-2'-3" x 15' Channel Letters
2'-3 13/16" x 15'-0" illuminated channel letters
& logo on rider system.

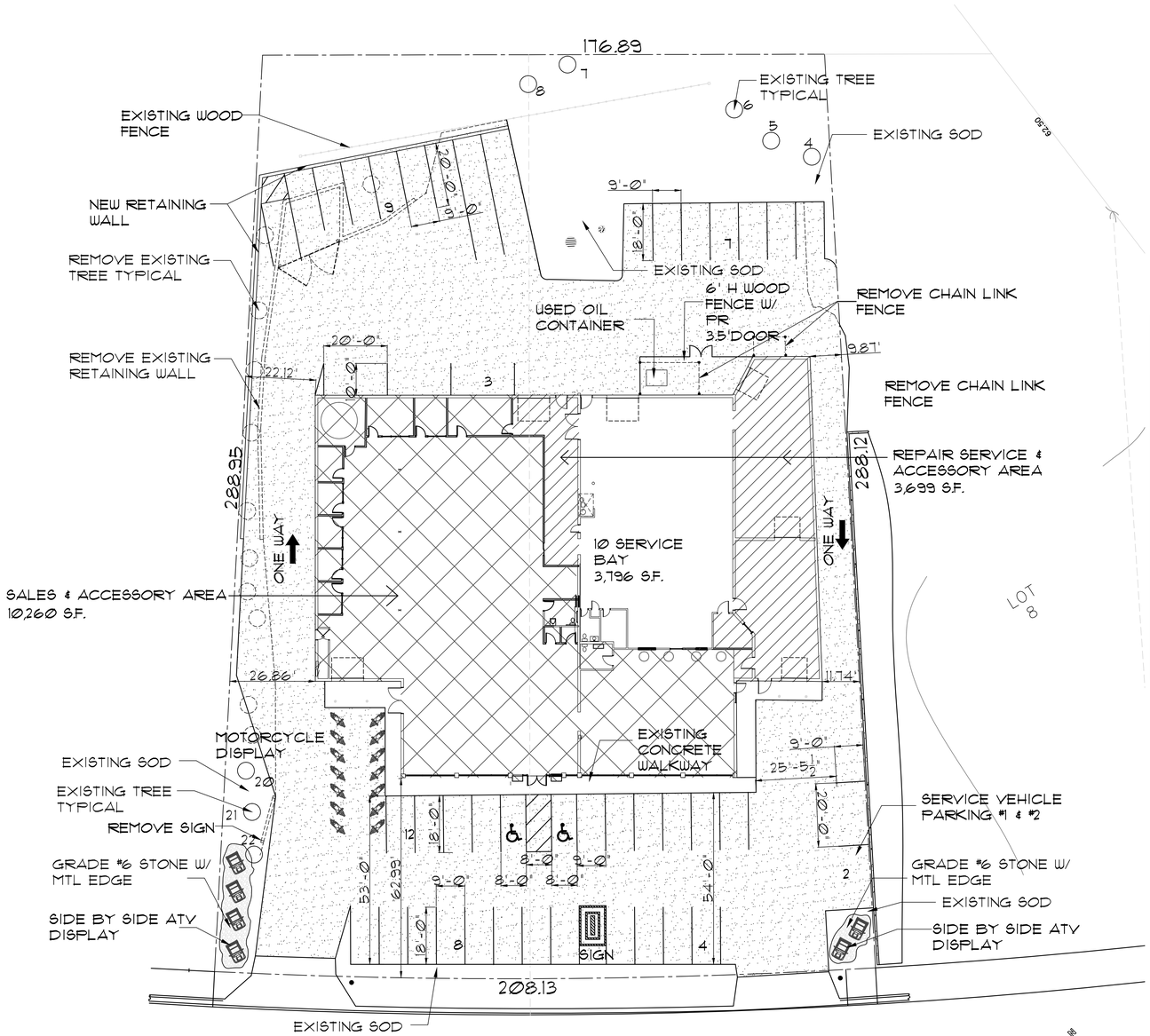

SITE PLAN/ LANDSCAPE PLAN
SCALE: 1"= 20'-0"

0 12'-6" 25'-0" 50'-0"
1"=20'-0"

PROJECT DATA

ZONING:
B-1 GENERAL BUSINESS SERVICE DISTRICT
SPECIAL USE
MOTORCYCLE (AUTOMOBILE) REPAIR
MOTORCYCLE (AUTOMOBILE) SALES

LOT AREA	55,840 S.F.
BUILDING AREA (EXISTING)	17,638 S.F.
OFF STREET PARKING	
REGULAR	43 PARKING
HANDICAPPED	2 PARKING
TOTAL	45 PARKING
PAVED SURFACE AREA	29,107 S.F.
LANDSCAPING AREA	9,095 S.F.

PROJECT SITE

SITE MAP
NO SCALE

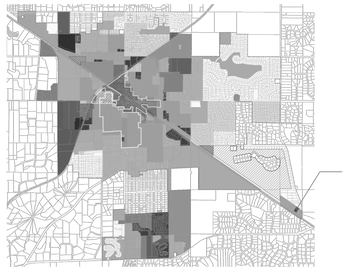

PROJECT SITE

VILLAGE OF BARRINGTON MAP
NO SCALE

Number	Tree type	DBH	Approximate Age
4	Buckthorn	3	
5	Buckthorn	8	
6	Buckthorn	12	
7	Cottonwood	21	42
8	Cottonwood	14	28
20	Buckthorn	12	
21	American Elm	3	12
22	American Elm	4	16

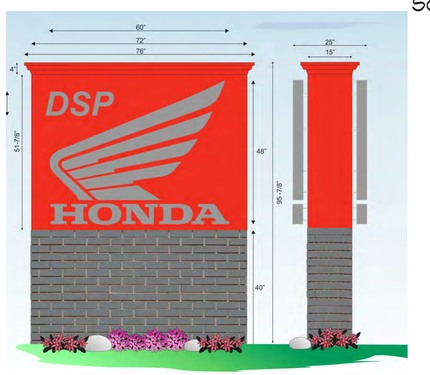

SIGN ELEVATIONS
NOSCALE

CD Group

Construction Design Architects, Ltd.
Construction Design Services, Ltd.

249 E. Prospect Avenue Suite 100
Mount Prospect, IL 60056

T 847.797.1700
F 847.797.7800

www.cdgroupllc.com

PROJECT NAME & LOCATION:
Barrington Honda

1201-1203 South Northwest Highway
Barrington, IL.

CONSULTANTS:

MARK	DATE	DESCRIPTION
	04/28/20	ISSUED FOR REVIEW
	04/30/20	ISSUED FOR REVIEW
	05/04/20	ISSUED FOR REVIEW
	05/06/20	ISSUED FOR REVIEW
	06/16/20	ISSUED FOR REVIEW
	06/22/20	ISSUED FOR REVIEW
	06/24/20	ISSUED FOR ARC AND PRELIMINARY PLAN COMMISSION REVIEW
	08/08/20	ISSUED FOR ARC AND PLAN COMMISSION REVIEW
	09/01/20	REVISED PER VILLAGE REVIEW

PROJECT NO: 3825

DRAWN BY: Y.S.
CHK'D BY:
DATE: 03/16/20

SHEET TITLE:
SITE/ LANDSCAPE PLAN
SITE MAP

SHEET NUMBER
A001

SHEET OF

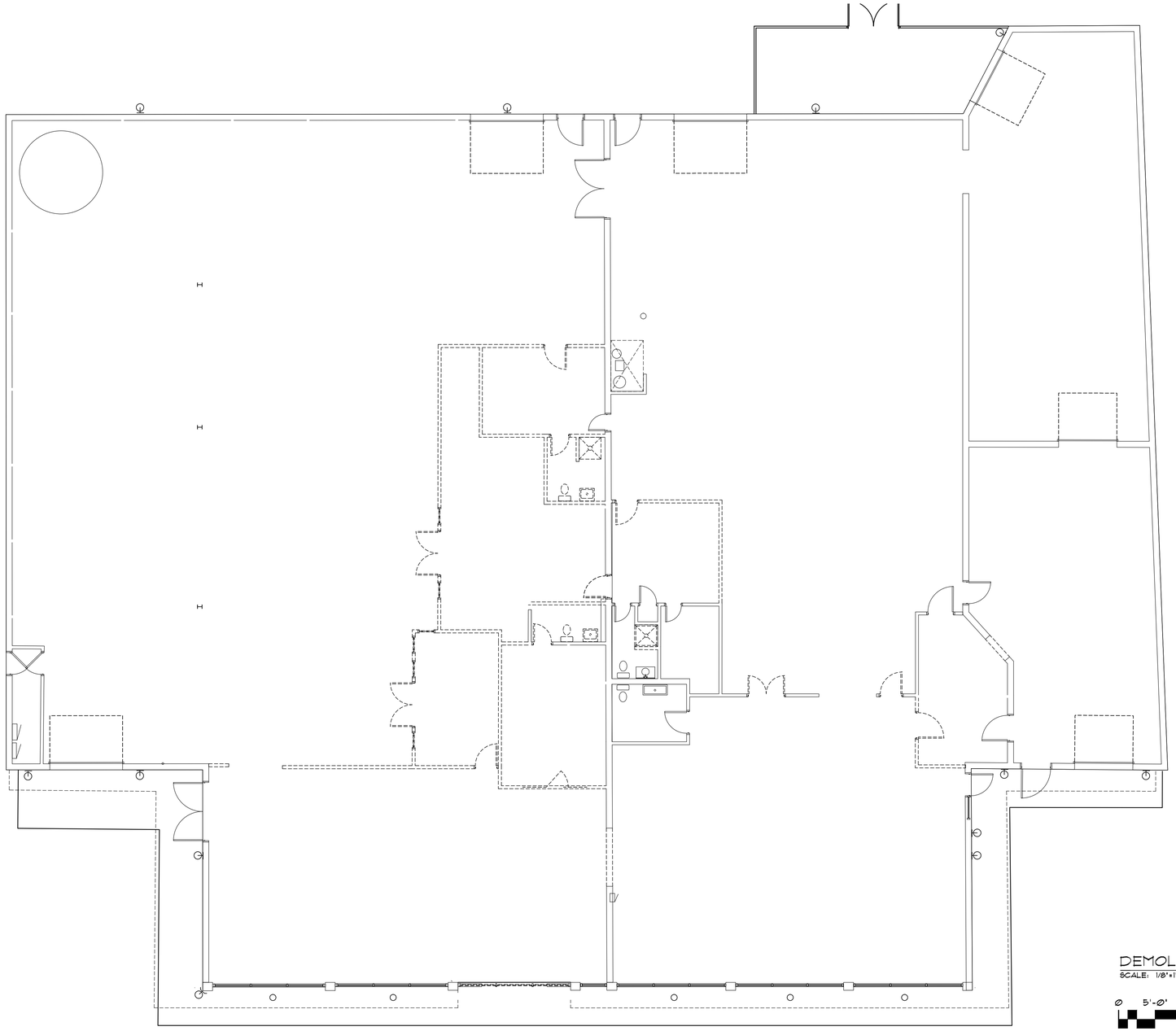

DEMOLITION PLAN
SCALE: 1/8"=1'-0"

0 5'-0" 10'-0" 20'-0"
1/8" = 1'-0"

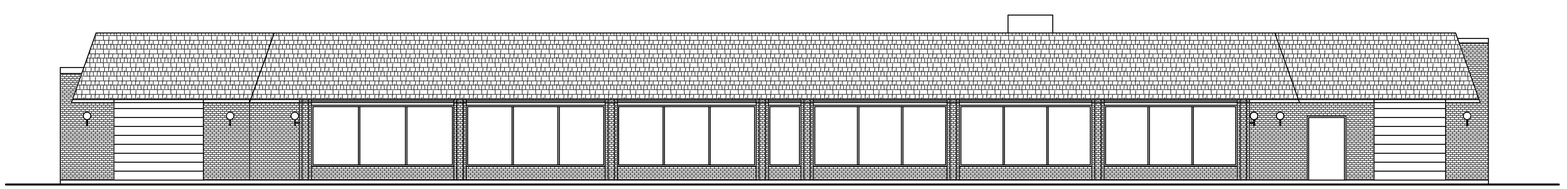

EXISTING FRONT ELEVATION
SCALE: 1/8"=1'-0"

0 5'-0" 10'-0" 20'-0"
1/8" = 1'-0"

CD Group

Construction Design Architects, Ltd.
Construction Design Services, Ltd.

249 E. Prospect Avenue Suite 100
Mount Prospect, IL 60056

T 847.797.1700
F 847.797.7800

www.cdgroupllc.com

PROJECT NAME & LOCATION:

Barrington Honda

1201-1203 South Northwest Highway
Barrington, IL.

CONSULTANTS:

MARK	DATE	DESCRIPTION
	04/28/20	ISSUED FOR REVIEW
	04/30/20	ISSUED FOR REVIEW
	05/04/20	ISSUED FOR REVIEW
	05/06/20	ISSUED FOR REVIEW
	06/16/20	ISSUED FOR REVIEW
	06/22/20	ISSUED FOR REVIEW
	06/24/20	ISSUED FOR ARC AND PRELIMINARY PLAN COMMISSION REVIEW
	08/08/20	ISSUED FOR ARC AND PLAN COMMISSION REVIEW
	09/01/20	REVISED PER VILLAGE REVIEW

PROJECT NO: 3825

DRAWN BY: Y.S.

CHK'D BY:

DATE: 03/16/20

SHEET TITLE:

DEMOLITION PLAN
EXISTING FRONT ELEVATION

SHEET NUMBER

A002

SHEET OF

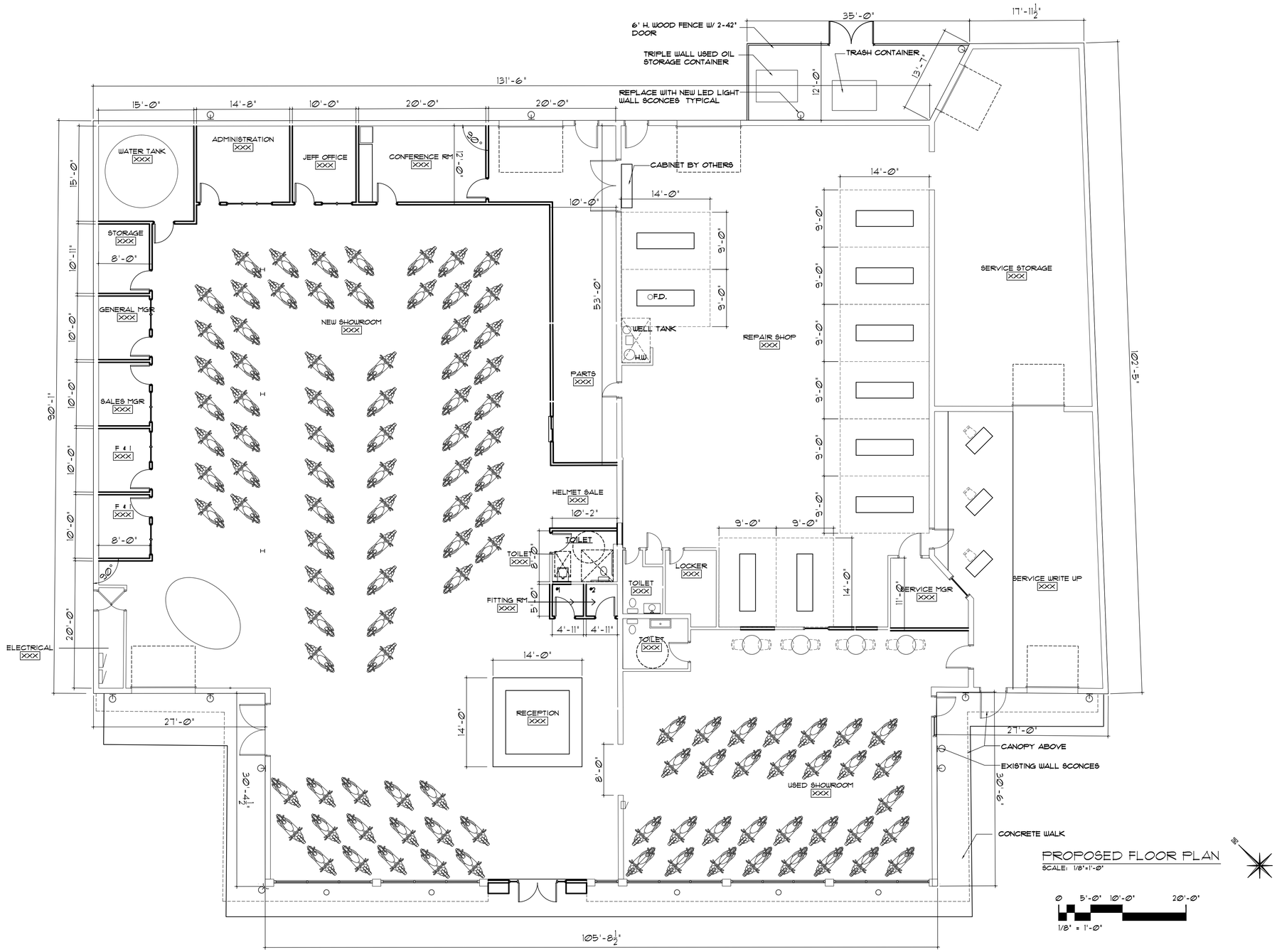

PROPOSED FLOOR PLAN

SCALE: 1/8"=1'-0"

CD Group

Construction Design Architects, Ltd.
Construction Design Services, Ltd.

249 E. Prospect Avenue Suite 100
Mount Prospect, IL 60056

T 847.797.1700
F 847.797.7800

www.cdgroupllc.com

PROJECT NAME & LOCATION:

Barrington Honda

1201-1203 South Northwest Highway
Barrington, IL.

CONSULTANTS:

MARK	DATE	DESCRIPTION
	04/28/20	ISSUED FOR REVIEW
	04/30/20	ISSUED FOR REVIEW
	05/04/20	ISSUED FOR REVIEW
	05/06/20	ISSUED FOR REVIEW
	06/16/20	ISSUED FOR REVIEW
	06/22/20	ISSUED FOR REVIEW
	06/24/20	ISSUED FOR ARC AND PRELIMINARY PLAN COMMISSION REVIEW
	08/08/20	ISSUED FOR ARC AND PLAN COMMISSION REVIEW
	09/01/20	REVISED PER VILLAGE REVIEW

PROJECT NO: 3825

DRAWN BY: Y.S.

CHK'D BY:

DATE: 03/16/20

SHEET TITLE:

PROPOSED FLOOR PLAN

SHEET NUMBER

A003

SHEET OF

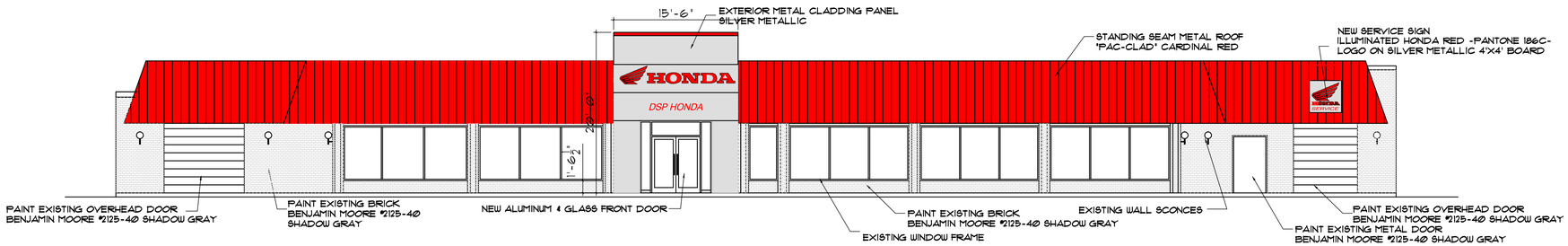

PROPOSED FRONT ELEVATION

SCALE: 1/8"=1'-0"

0 5'-0" 10'-0" 20'-0"

1/8" = 1'-0"

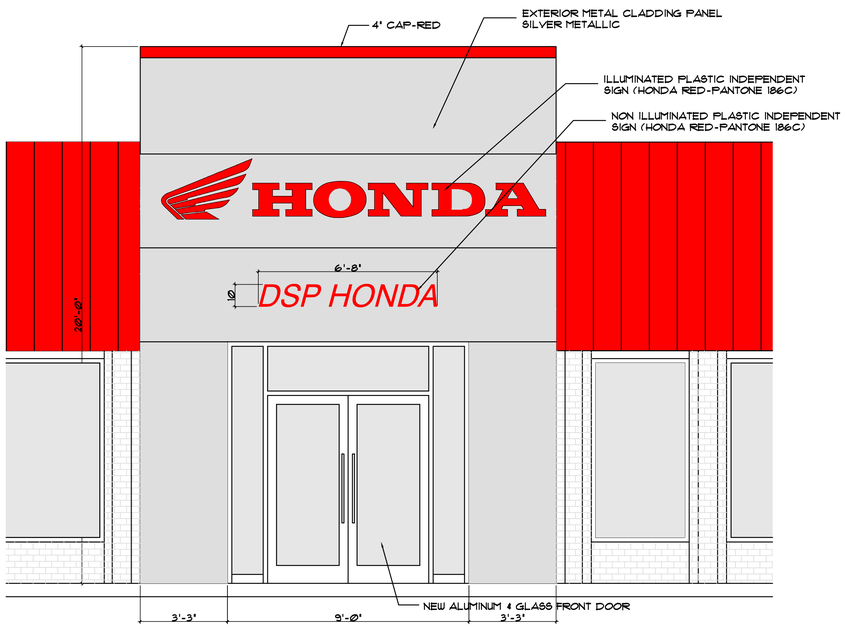

NEW ENTRY MONUMENT ELEVATION

SCALE:3/8"=1'-0"

0 9" 1'-6" 3'-0"

3/8" = 1'-0"

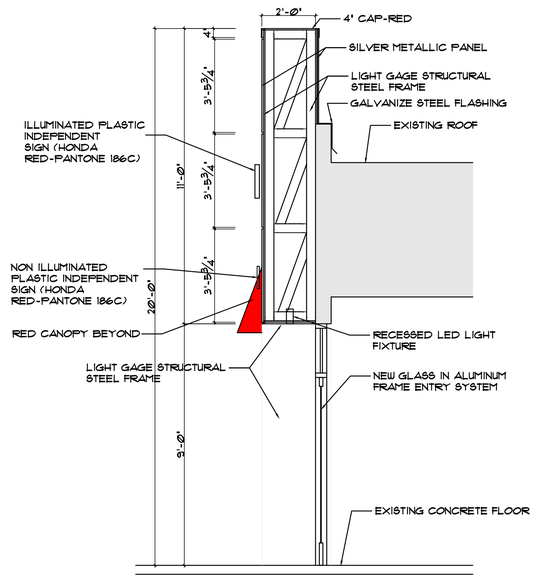

NEW ENTRY MONUMENT SECTION

SCALE:3/8"=1'-0"

0 9" 1'-6" 3'-0"

3/8" = 1'-0"

CD Group

Construction Design Architects, Ltd.
Construction Design Services, Ltd.

249 E. Prospect Avenue Suite 100
Mount Prospect, IL 60056

T 847.797.1700
F 847.797.7800

www.cdgroupllc.com

PROJECT NAME & LOCATION:

Barrington Honda

1201-1203 South Northwest Highway
Barrington, IL.

CONSULTANTS:

MARK	DATE	DESCRIPTION
	04/28/20	ISSUED FOR REVIEW
	04/30/20	ISSUED FOR REVIEW
	05/04/20	ISSUED FOR REVIEW
	05/06/20	ISSUED FOR REVIEW
	06/16/20	ISSUED FOR REVIEW
	06/22/20	ISSUED FOR REVIEW
	06/24/20	ISSUED FOR ARC AND PRELIMINARY PLAN COMMISSION REVIEW
	08/08/20	ISSUED FOR ARC AND PLAN COMMISSION REVIEW
	09/01/20	REVISED PER VILLAGE REVIEW

PROJECT NO: 3825

DRAWN BY: Y.S.

CHK'D BY:

DATE: 03/16/20

SHEET TITLE:

PROPOSED FRONT ELEVATION

SHEET NUMBER

A004

SHEET OF

BARRINGTON
Be Inspired.

ARC Memorandum

To: Architectural Review Commission

From: Jennifer Tennant, Assistant Director of Development Services

Subject: ARC 20-21: 207 W. Station Street – 2nd Preliminary Review

Date: September 24, 2020

On August 27, 2020, The ARC conducted a preliminary review of a proposed project at 207 W. Station Street. The ARC provided the following comments for the Petitioner's consideration:

1. Maintain the four original window sizes and locations on the front elevation.
2. Maintain the original shingle & lap siding configuration with the flared edge detail and center band board. Materials can be replaced with those that match the original in design, dimension, profile and texture. If replaced, the lap siding exposure should not exceed the original siding exposure.
3. The proposed full width front porch should be reduced by 1'-0" on each side.
4. The ARC recommends carefully considering the Queen Anne influence of the architecture in the front porch design. Consider a more classic column detail.
5. Tongue and groove porch flooring running perpendicular to the face of the house must be used regardless of material (wood or composite).
6. All trim details should match the original details in design, dimension, profile and texture.
7. All material information, including door and window specifications, must be provided as part of the final submittal and labeled on the final plans.
8. Eliminate the horizontal board proposed at the bottom of the porch skirting.
9. Section details for all major trim elements of the house (cornice, window trim, etc.) and porch (full section and column detail, skirting detail, railing detail, etc.) as well as wall sections through the addition must be provided as part of the final submittal.

The Petitioner has requested a second preliminary meeting to gain further clarification on several items discussed at the first preliminary meeting including the front porch design prior to determining how to proceed with the project.

The following documents are attached:

- Original preliminary plans for reference only
- Site Photos

Private Residence
207 West Station St.
Barrington, Illinois

INDEX TO DRAWINGS

A1	SITE PLAN
A2	FOUNDATION PLAN
A3	FIRST FLOOR FRAMING PLANS
A4	FIRST FLOOR PLAN
A5	SECOND FLOOR PLAN
A6	ROOF PLAN
A7	WEST ELEVATION
A8	SOUTH ELEVATION
A9	EAST ELEVATION
A10	NORTH ELEVATION
A11	SECTIONS
A12	SECTIONS
A13	SCHEDULES
A14	DETAILS AND ELEVATIONS
ME1	MECH./ELECT. PLANS
ME2	MECH./ELECT. NOTES & DETAILS

GENERAL CONDITIONS

The General Conditions shall be AIA Document A-205 'THE GENERAL CONDITIONS OF THE CONTRACT FOR CONSTRUCTION OF A SMALL PROJECT' dated 2007 and shall be included as a part of the Contract Documents.

Contractor shall maintain insurance coverage throughout the term of the Project in accordance with the aforementioned General Conditions and the following minimum amounts:

1. Workman's Compensation: As required by governing laws.

2. Comprehensive General Liability and Indemnification (including auto)
   $1,000,000.00 (each occurrence)
   $2,000,000.00 (aggregate)

3. Auto Insurance
   $1,000,000.00 (aggregate)

4. Property Damage
   $1,000,000.00 (each occurrence)
   $2,000,000.00 (aggregate)

ALL CONSTRUCTION SHALL CONFORM TO THE FOLLOWING CODES:

2017 National Electrical Code
2018 International Residential Code
2018 International Mechanical Code
2018 International Fire Code
2018 International Fuel Gas Code
2018 Property Maintenance Code
Illinois Energy Conservation Code (2018 IECC)
Illinois State Plumbing Code

THE VILLAGE OF BARRINGTON MUNICIPAL CODE
THE VILLAGE OF BARRINGTON ZONING ORDINANCE

ARCHITECT'S CERTIFICATION

I hereby certify that these plans were drawn by me or under my direct supervision and to the best of my knowledge and belief conform to all applicable codes and ordinances of the City of Northbrook, Illinois.

Michael S Kollman, Licensed Architect, Illinois No. 001-11653

SITE AND ZONING DATA

CLASSIFICATION ZONE - R6
LOT AREA - 10,395 SQ. FT.
FRONT YARD - 30'
SIDE YARD - 7'
REAR YARD - 30'

MAX HEIGHT - 25' 2.5 STORIES
MAX ACCESORY BLDG. HEIGHT - 15'
MAX BLD'G COVERAGE - 35% = 3638 SQ. FT.
MAX LOT COVERAGE- 50% = 5197 SQ. FT.
MAX. FLOOR AREA = 5118.5 SQ.FT.

PROPOSED BLD'G COVERAGE - 17.4% = 1813 SQ. FT.
PROPOSED LOT COVERAGE- 37.5% = 3894 SQ. FT.
PROPOSED FLOOR AREA = 2616 SQ. FT.

SEE CIVIL ENGINEERING C-2 FOR CALCULATIONS

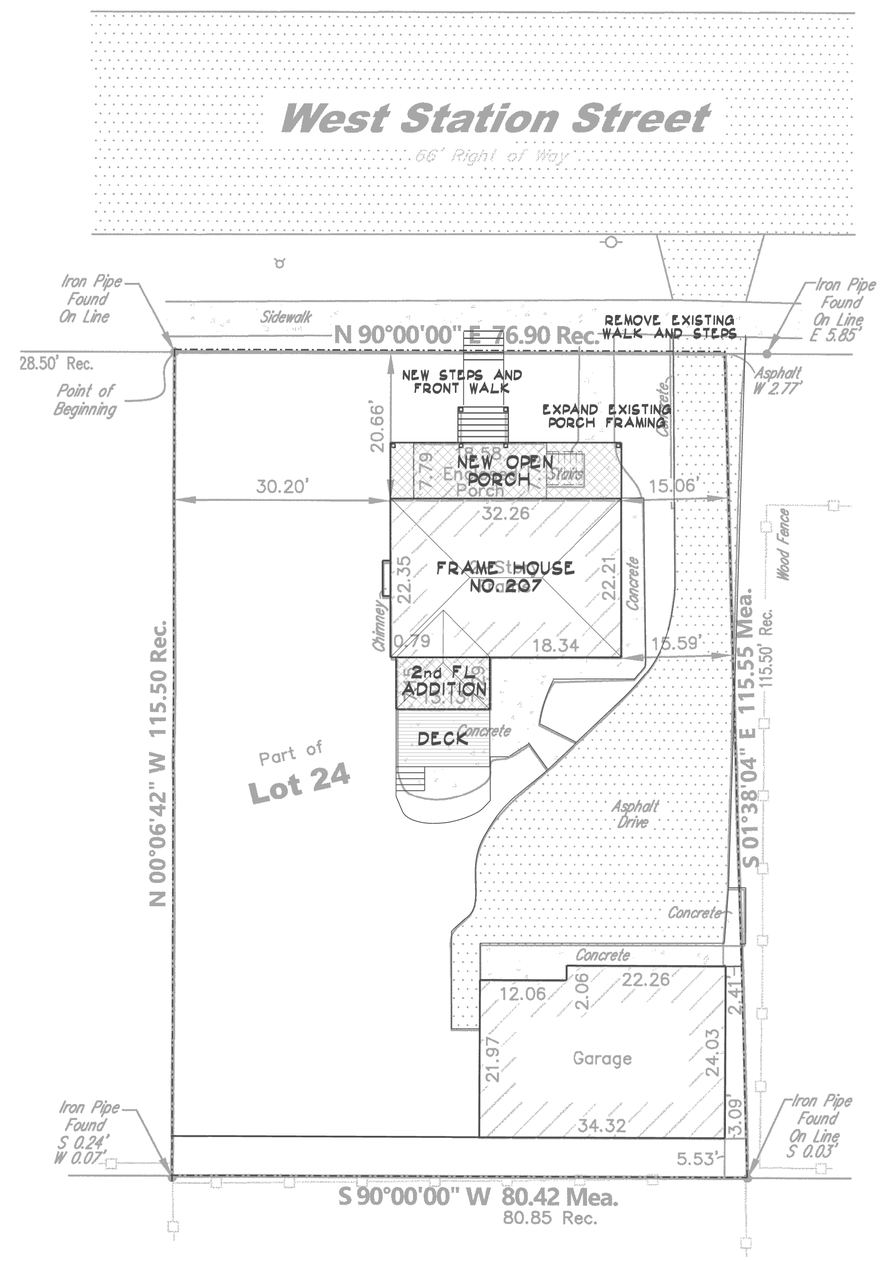

Wexler/Kollman
Wexler/Kollman P.C., Ltd.
16595 Easton Avenue
Prairie View, Illinois 60069
847•913•0407
Architecture • Site & Land Planning • Landscape Design

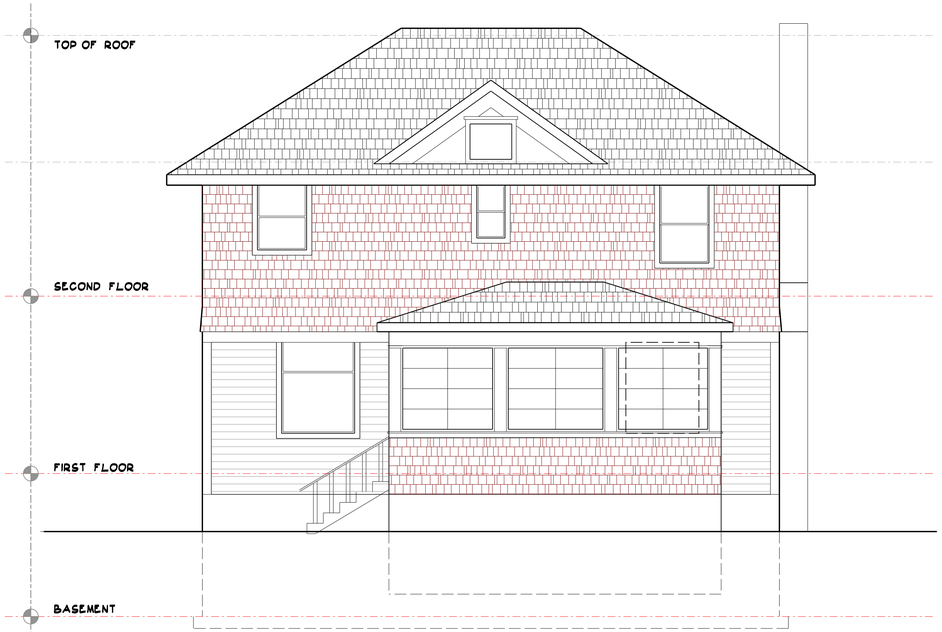

NORTH ELEVATION

1/4"=1'-0"

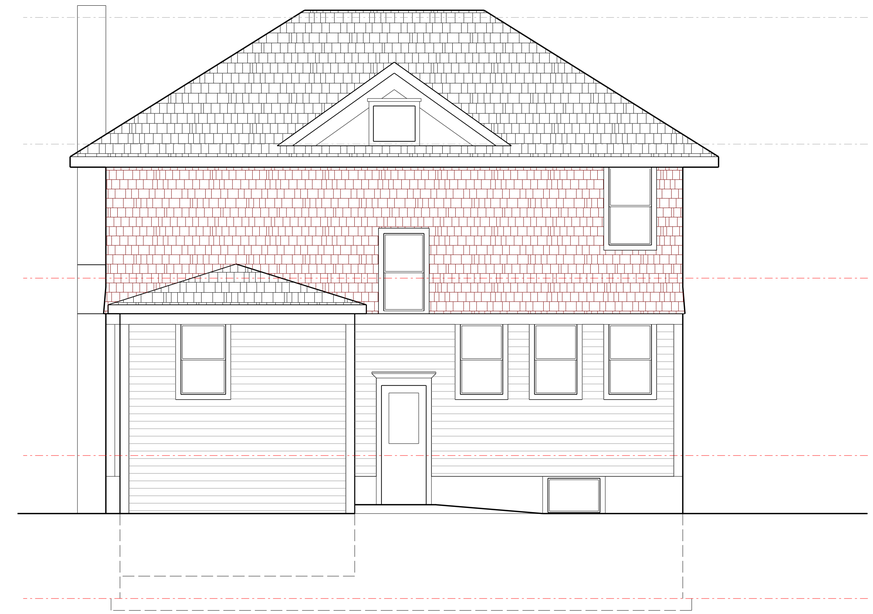

SOUTH ELEVATION

1/4"=1'-0"

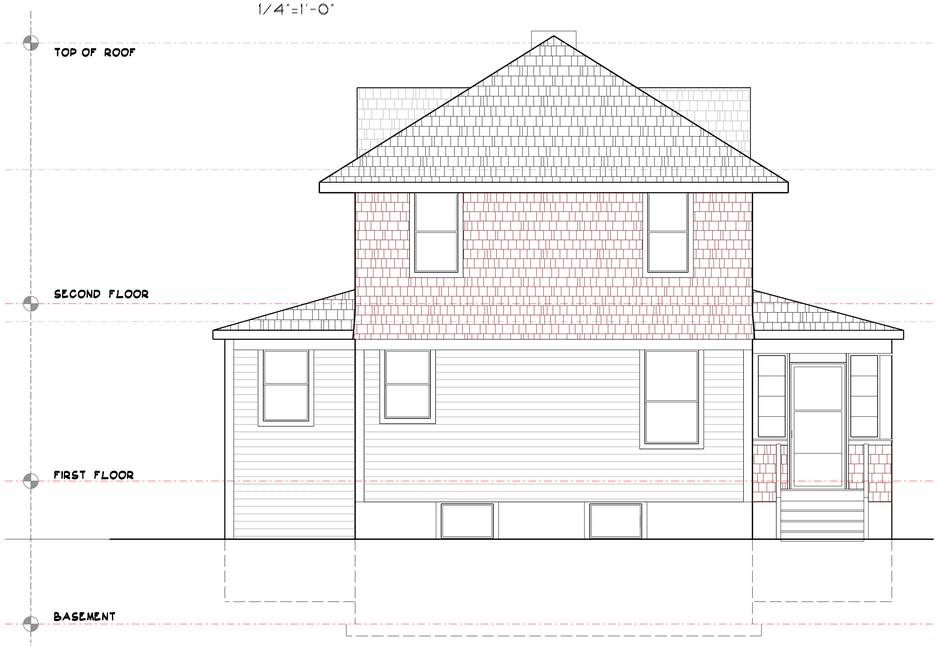

EAST ELEVATION

1/4"=1'-0"

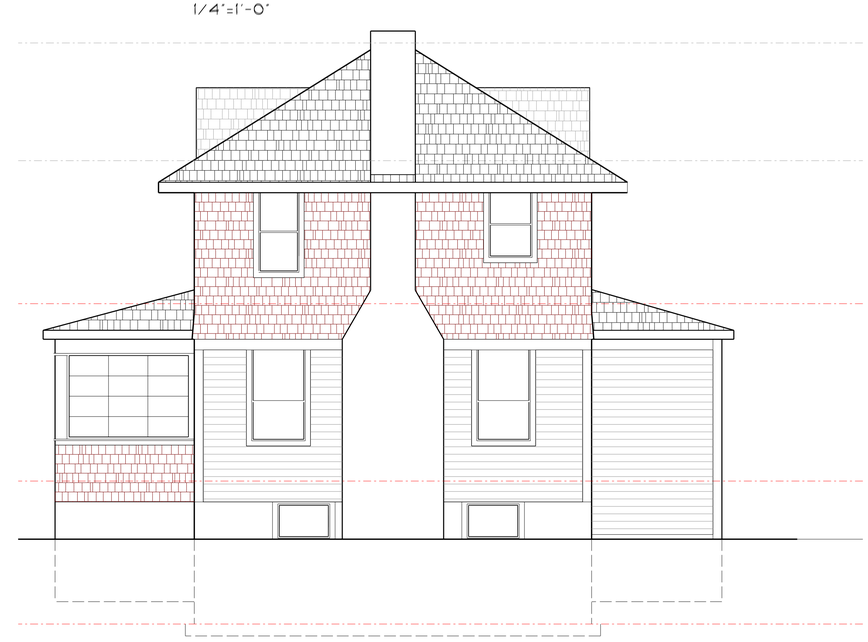

WEST ELEVATION

1/4"=1'-0"

Wexler/Kollman

Wexler/Kollman P.C., Ltd.
16595 Easton Avenue
Prairie View, Illinois 60069
847•913•0407

Architecture • Site & Land Planning • Landscape Design

Private Residence
207 West Station St.
Barrington, Illinois

REVISIONS

PROJECT NO.

SHEET NO.

DATE: AUGUST 12, 2020

PROPOSED NORTH ELEVATION

1/4"=1'-0"

ROOFING NOTE:

REMOVE EXISTING ROOFING.
INSTALL NEW 330# AR SHINGLES

EXTERIOR SIDING/TRIM NOTES:

PRE-FINISHED LG SMARTSIDE
SMOOTH TRIM AND
BEVEL SIDING W/5" REVEAL

PORCH AND DECK CONSTRUCTION:

2 X 6 WOOD POLYMER DECKING,
TREADS AND SMOOTH LP TRIMS.

16" WOOD COLUMNS WITH
CAPS AND BASES.

HISTORICALLY ACCURATE
RAILING AND BALLUSTERS
2" TOP RAIL, 1.5" BALLUSTERS
5/4" BOTTOM RAIL

1X VERTICAL SKIRT BOARDS

PROPOSED SOUTH ELEVATION

1/4"=1'-0"

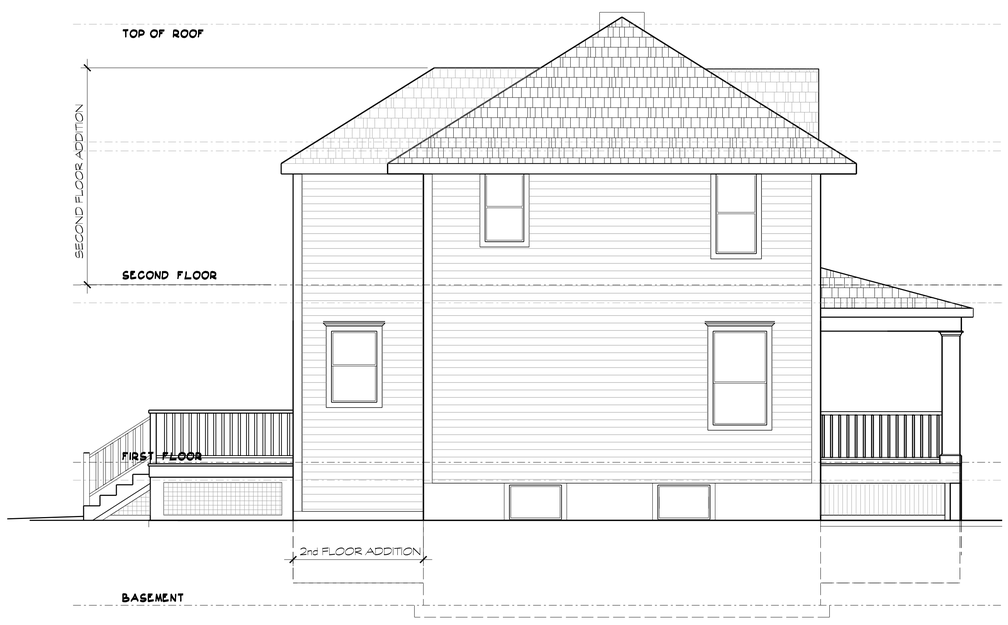

PROPOSED WEST ELEVATION

1/4"=1'-0"

WINDOW NOTES:

REMOVE AND REPLACE EXISTING
WINDOWS WITH NEW ENERGY STAR
WOOD REPLACEMENT WINDOWS TO
MATCH EXISTING STYLE.

PORCH AND DECK CONSTRUCTION:

2 X 6 WOOD POLYMER DECKING,
TREADS AND SMOOTH LP TRIMS.

16" WOOD COLUMNS WITH
CAPS AND BASES.

HISTORICALLY ACCURATE
RAILING AND BALLUSTERS
2" TOP RAIL, 1.5" BALLUSTERS
5/4" BOTTOM RAIL

1X VERTICAL SKIRT BOARDS

PROPOSED WEST ELEVATION

1/4"=1'-0"

Wexler/Kollman

Wexler/Kollman P.C., Ltd.
16595 Easton Avenue
Prairie View, Illinois 60069
847•913•0407

Architecture • Site & Land Planning • Landscape Design

Private Residence
207 West Station St.
Barrington, Illinois

REVISIONS

PROJECT NO.

DATE: AUGUST 12, 2020

SHEET NO.

A3

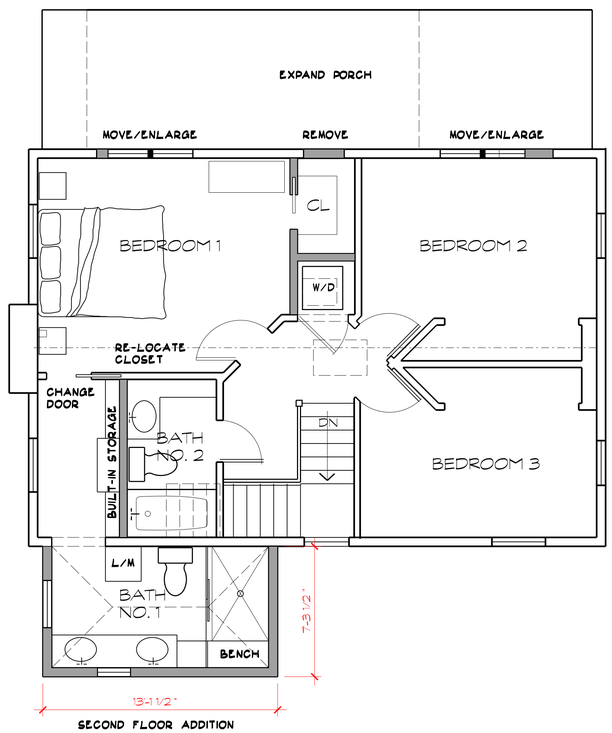

SECOND FLOOR ADDITION

EXISTING WALLS

PROPOSED WALLS

REMOVED WALLS

EXISTING SECOND FLOOR PLAN

1/4"=1'-0" OPTION 6

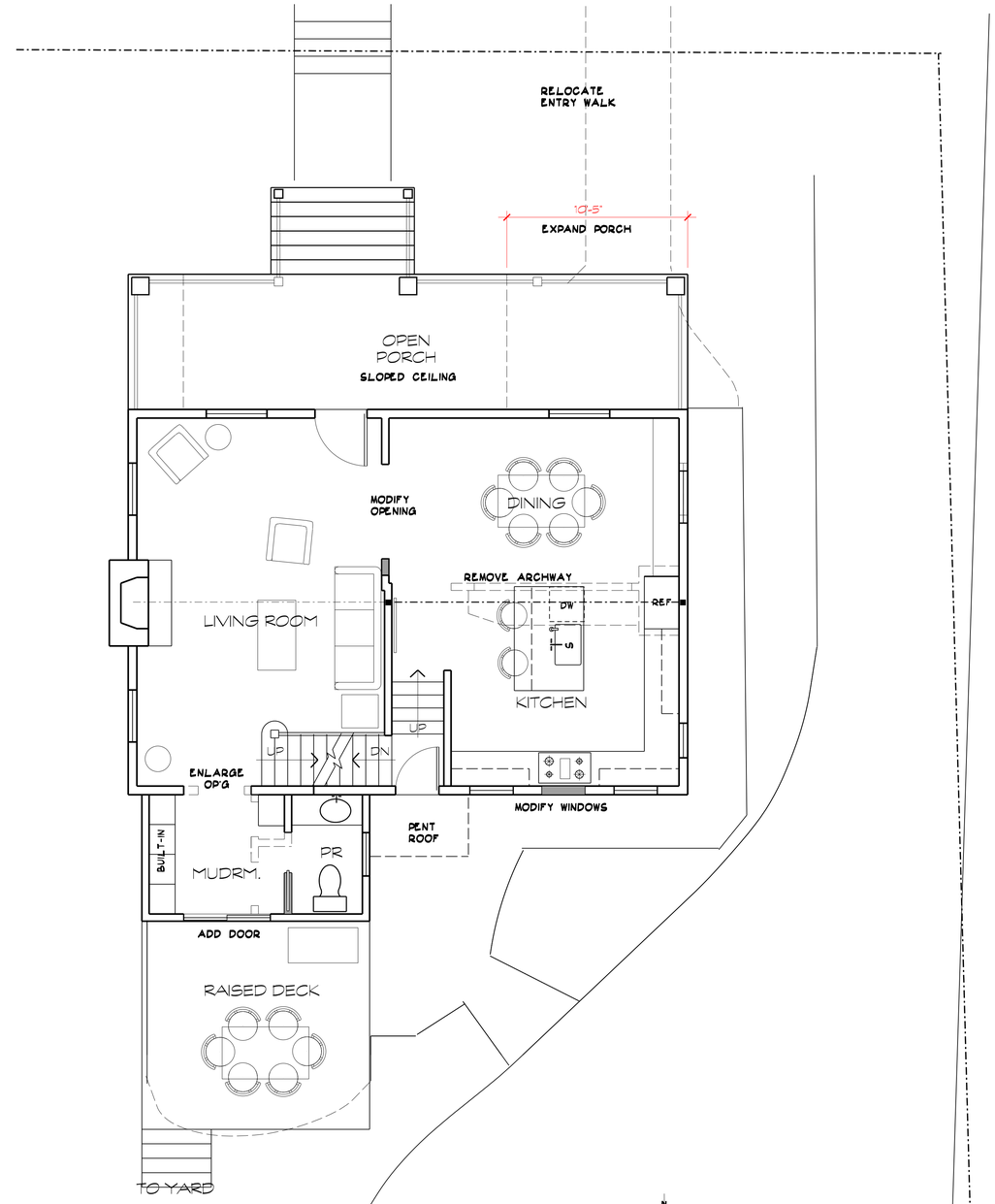

PROPOSED FIRST FLOOR PLAN

1/4"=1'-0" OPTION 6

N

10 0 5 10 20

Wexler/Kollman

Wexler/Kollman P.C., Ltd.
16595 Easton Avenue
Prairie View, Illinois 60069
847•913•0407
Architecture • Site & Land Planning • Landscape Design

Private Residence
207 West Station St.
Barrington, Illinois

REVISIONS

PROJECT NO.

SHEET NO.

DATE: AUGUST 12, 2020

© VHT STUDIOS

© VHT STUDIOS

BARRINGTON
Be Inspired.

ARC Memorandum

To: Architectural Review Commission

From: Jennifer Tennant, Assistant Director of Development Services

Subject: ARC 20-26: Materials Review – Jeld Wen 4500/5500 Series Windows

Date: September 24, 2020

Staff has been approached by a resident regarding the use of Jeld Wen 5500 Series windows in the Historic District. This window was recently renamed 5500 series, it was previously called 4500 series. This is an aluminum clad wood window.

The ARC should review the specifications for the proposed window for potential use in the Historic District.

The following aluminum clad windows are approved: Marvin Ultimate Series, Crestline Elite, Pella Reserve Traditional, Kolbe Kolbe Ultra Series and Windsor Pinnacle Series.

The following all wood windows are approved: Marvin Ultimate Series, Pella Reserve Traditional, Kolbe Kolbe Heritage and Sierra Pacific (formerly Hurd).

The ARC has also approved the Renewal by Andersen Double Hung Fibrex window and the Andersen 400 Series Woodwright window which is a wood window with exterior Fibrex cladding.

In total, there are currently 11 windows approved for use in the Historic District.

The windows specifications and pictures of the double hung window are attached. A physical window sample will not be presented due to the virtual meeting format,

If this window is approved for use in the Historic District only simulated divided lites or no lites will be permitted. The attached pictures show dividers between the glass which will not be permitted if the window is approved.

The following documents are attached:

- Photos of the window as installed
- Jeld Wen 5500 Series Specifications

W-5500 Wood Clad-Wood Windows Double-Hung

Architectural Design Manual

September 2019

TABLE OF CONTENTS

Product Information
General Information....2
Lite Cut Information....3
Clear Opening Formulas....4
Grid, Bottom Rail & Glass Stop Options....5
Unit Sizing....6
Trim and Sill Nose Options....7
Jamb Extender & Prep for Stool Options....8
Mullion Options....9

Section Details
Operator:
Standard Sections....11
Impact Sections....12
Radius Top / Segment Head - Vertical Sections....13
Picture:
Standard Sections – 6/4 Sash....14
Standard Sections – 8/4 Sash....15
Radius Top & Segment Head - Vertical Section....16
Transom
Standard Sections....17
Bay:
Standard Sections....18
Standard Projections....19

Sizing Details
Min-Max Sizing....20

GENERAL INFORMATION

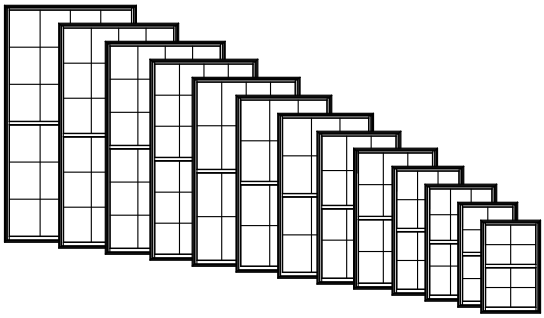

Dimensional Windows

W-5500 Clad-Wood Double-Hung windows may be specified as "dimensional", by adjusting the desired rough opening width or height. W-5500® Clad-Wood Double-Hung windows feature fully operating upper and lower sash which can be tilted or removed for easy cleaning.

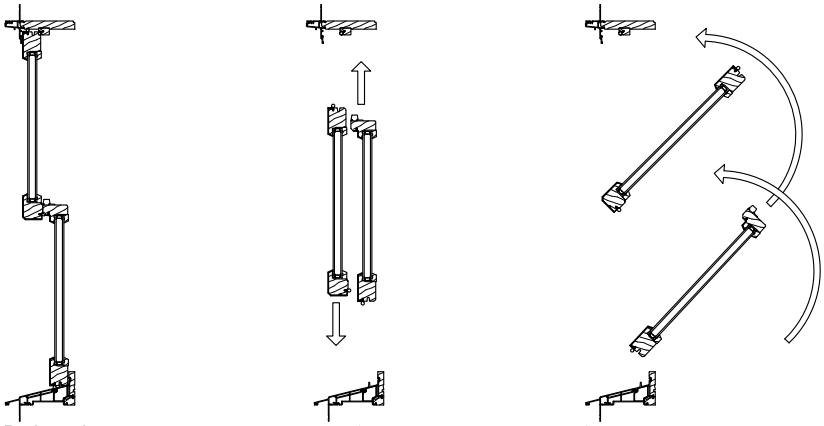

Both sash closed

Upper & lower sash operating

Sash tilting

Multiple Assemblies

W-5500 Clad-Wood Double-Hung windows may be mulled beside other clad-wood double-hung or clad-wood picture windows, or below clad-wood transom windows, to fulfill a wide variety of needs.

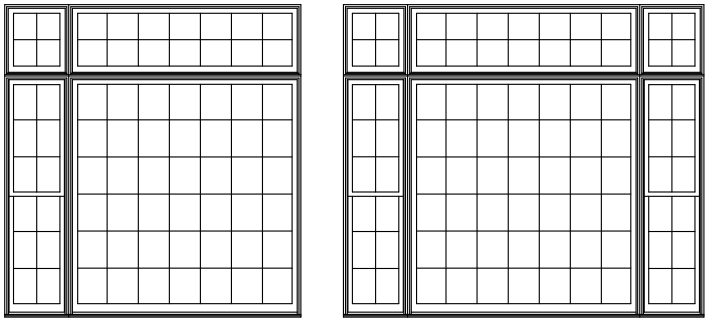

Product specifications may change without notice.
Questions? Consult JELD-WEN customer service.

LITE CUT INFORMATION

Lite Cut Options

W-5500 Clad-Wood Double-Hung Windows are available with removable Grilles, Grilles Between Glass (GBG), or Simulated Divided Lites (SDL) in various widths and styles. The standard grid patterns are shown below.

Special lite cut patterns can include a wide variety of straight line and radius patterns. Non-standard patterns are subject to factory approval.

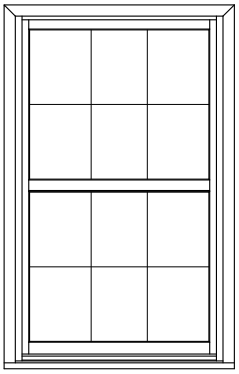

Colonial

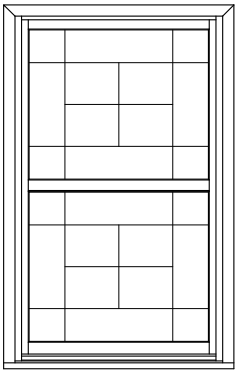

Uneven

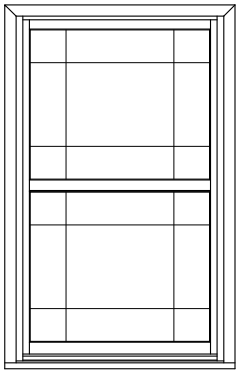

Prairie

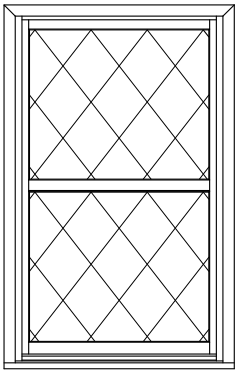

Diamond

Bar Alignment

Alignment of divided lite muntin bars from one window to the next is often required by fine architectural design. Wood grilles, GBG, and SDL's may be specified with muntin bars aligned.

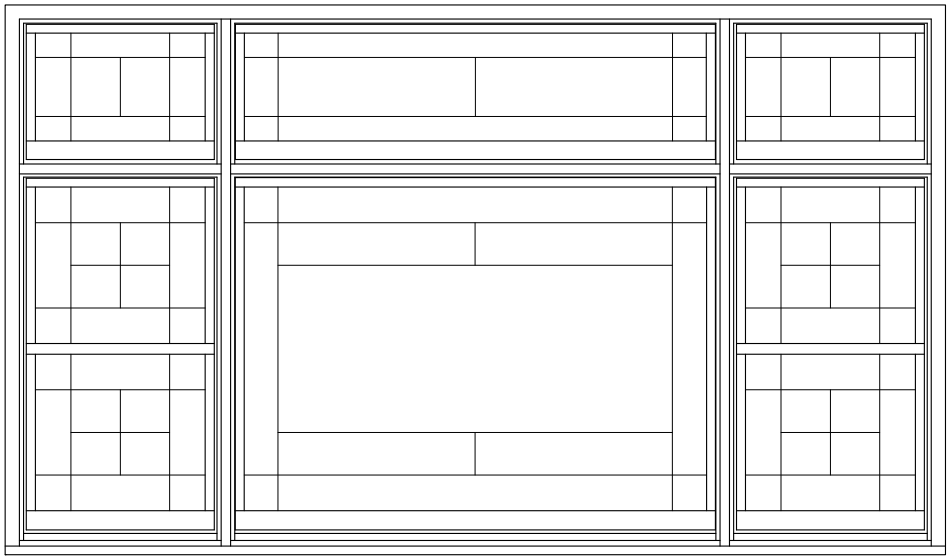

Product specifications may change without notice.
Questions? Consult JELD-WEN customer service.

CLEAR OPENING FORMULAS

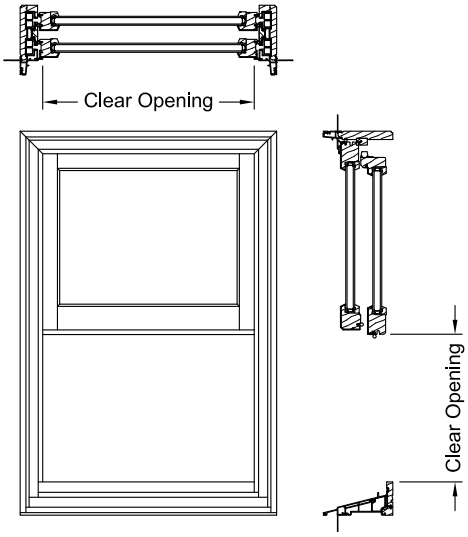

Double-Hung (Even Divide)
Width = Frame Width - 3 3/4"
Height= (Frame Height / 2) - 3 5/8"

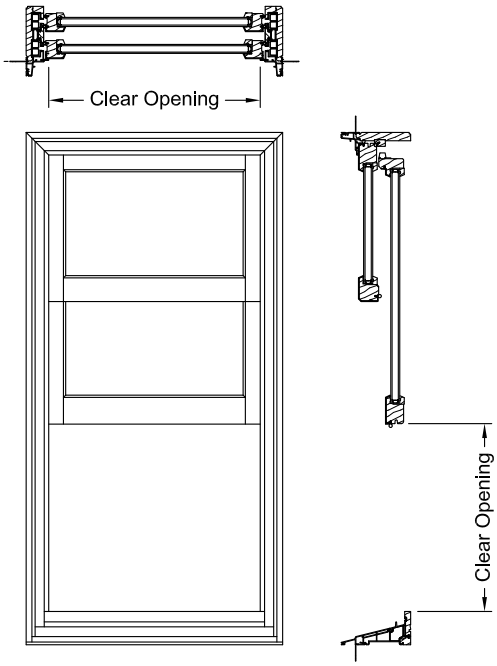

Cottage Double-Hung
Width = Frame Width - 3 3/4"
Height = (Frame Height / 2) - 8 5/32"

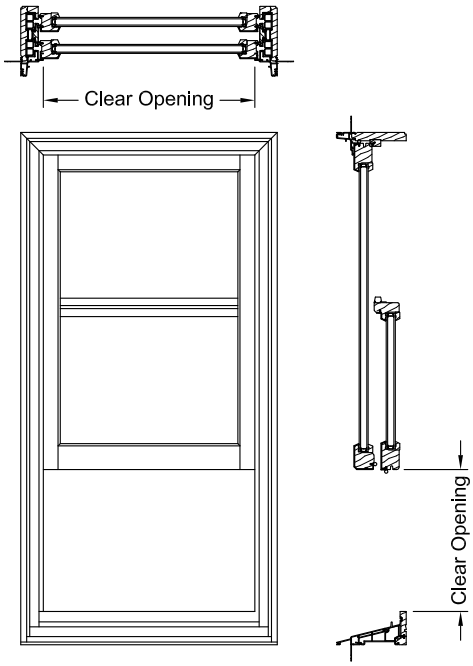

Reverse Cottage Double-Hung
Width = Frame Width - 3 3/4"
Height = (Frame Height / 2) - 7 29/32"

Product specifications may change without notice.
Questions? Consult JELD-WEN customer service.

GRID, BOTTOM RAIL & GLASS STOP OPTIONS

Exterior ← → Interior

SDL Options

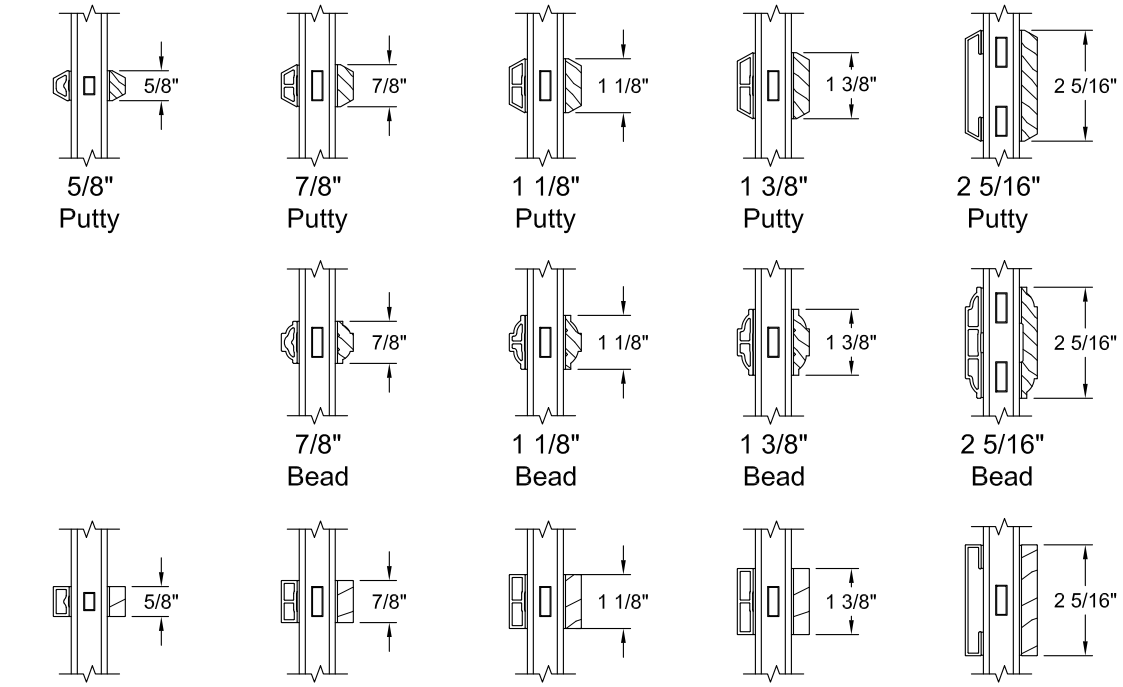

Note: Various Combinations of the SDL Bars Shown are Available

Bottom Rail & Glass Stop Options

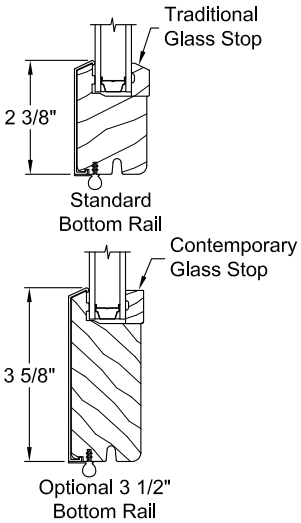

GBG Options

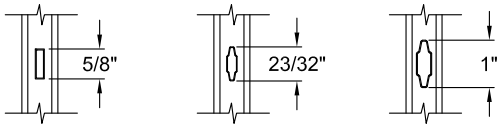

Grille Options

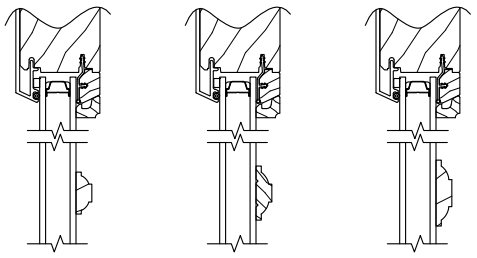

Product specifications may change without notice.
Questions? Consult JELD-WEN customer service.

Scale: 3" = 1' - 0"

UNIT SIZING

Trim- 4 Sides Of Unit Dimensions apply to horizontal and vertical directions.

Rough Opening:
The frame size of the window plus 3/4".

Masonry Opening:
The overall size of the window, including trim, plus 1/2"

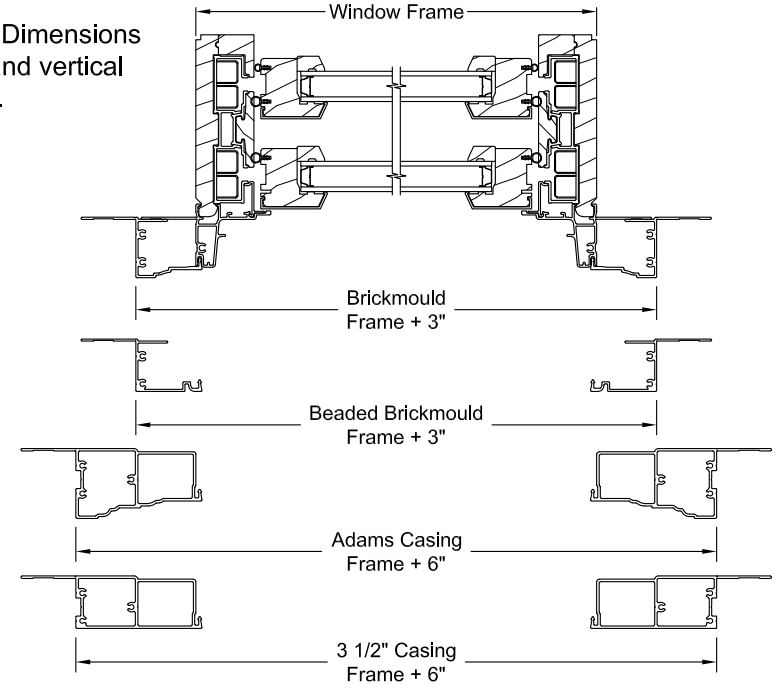

Trim- 3 Sides Of Unit
Dimensions apply vertical direction only.

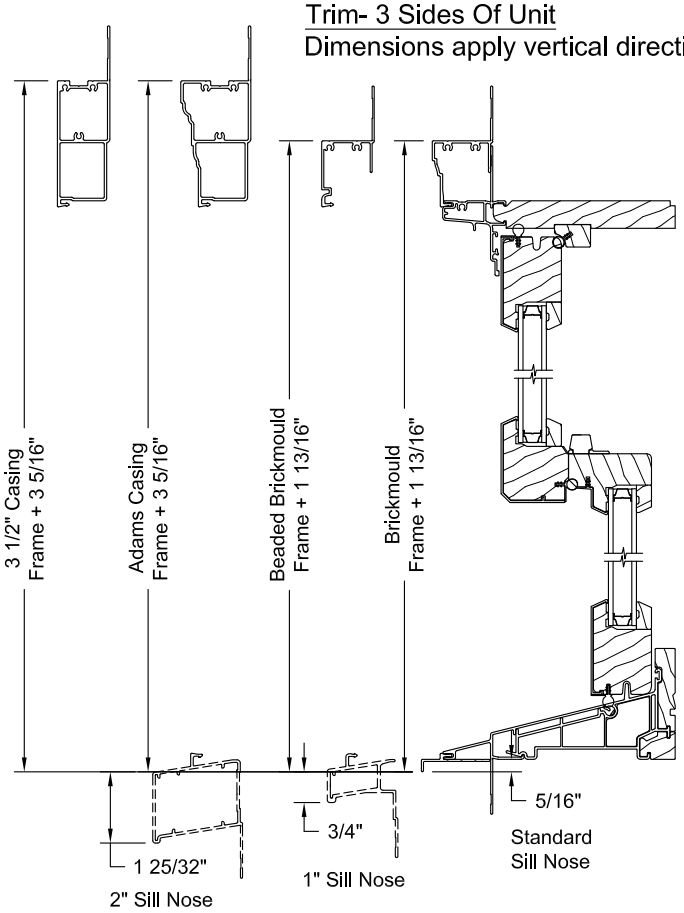

Product specifications may change without notice.
Questions? Consult JELD-WEN customer service.

TRIM & SILL NOSE OPTIONS

Trim Options

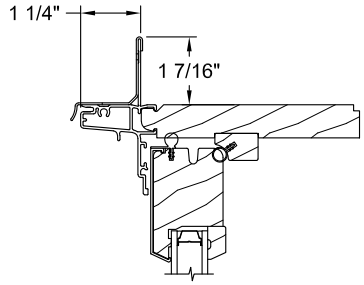

Standard

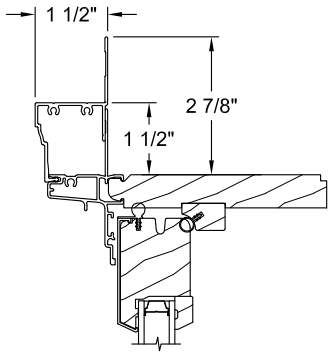

Brickmould

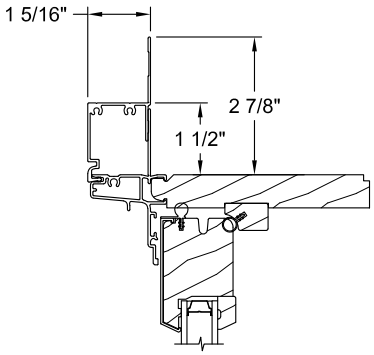

Beaded Brickmould

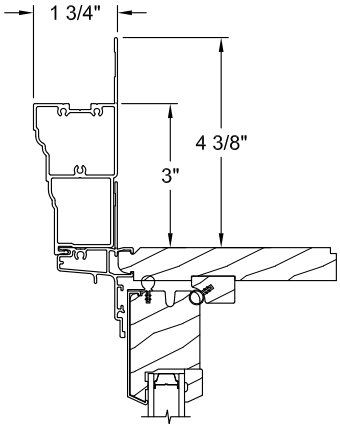

Adams Casing

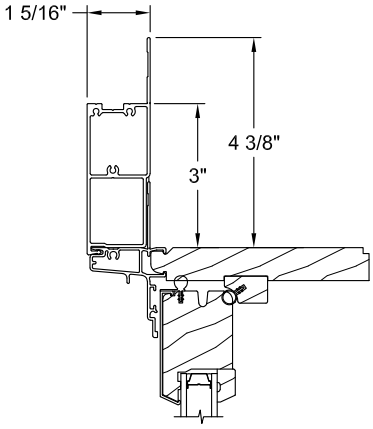

3 1/2" Flat Casing

Sill Nose Options

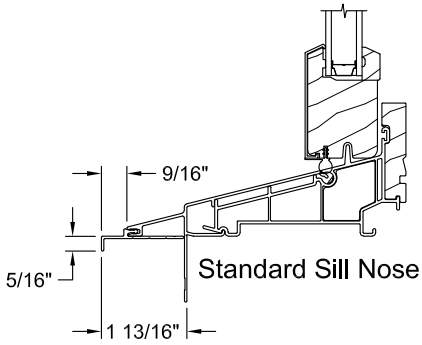

Standard Sill Nose

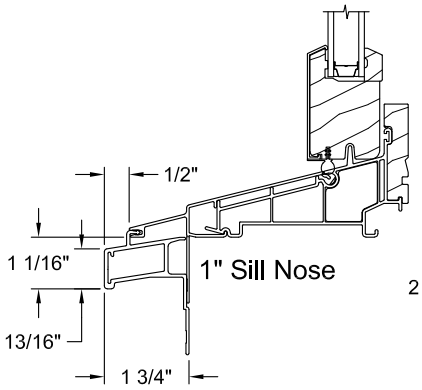

1" Sill Nose

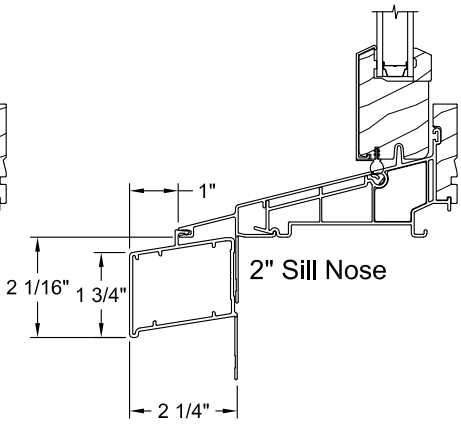

2" Sill Nose

Product specifications may change without notice.
Questions? Consult JELD-WEN customer service.

JAMB EXTENDER & PREP FOR STOOL OPTIONS

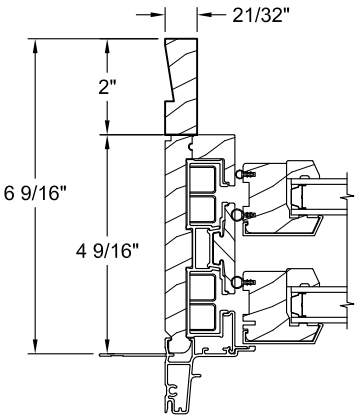

6 9/16" Jamb Width
4/4 Jamb Thickness

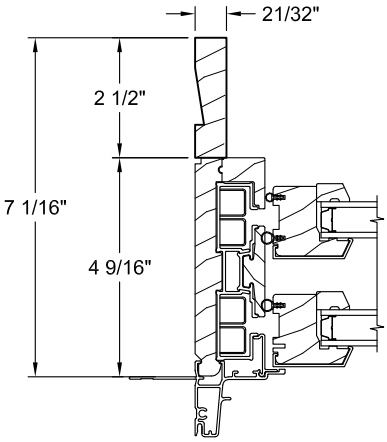

7 1/16" Jamb Width
4/4 Jamb Thickness

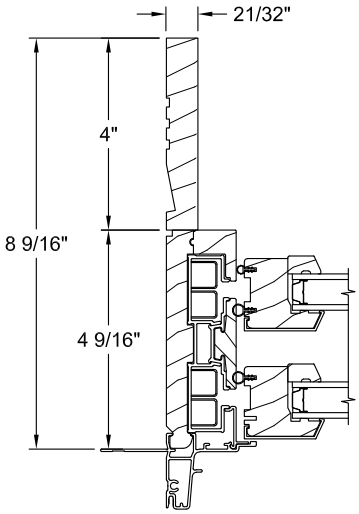

8 9/16" Jamb Width
4/4 Jamb Thickness

Return Kerf:
Generally located from first visible interior frame line. Kerfed option available on all jamb extender sizes.

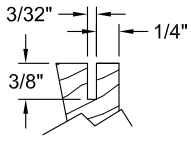

4/4 Jamb Typ.

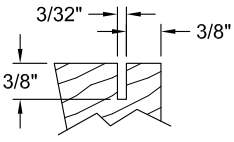

5/4 Jamb Typ.

Prep for Stool

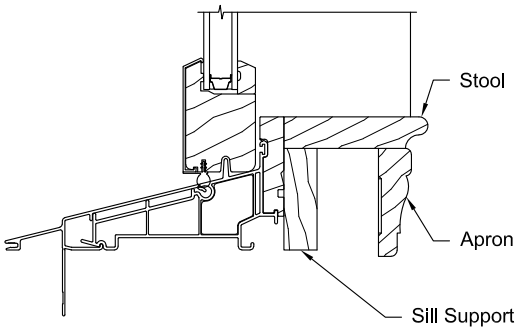

Note: Stool, apron, and sill support are applied by trim carpenter after window is installed and are not provided by JELD-WEN. Unit is shipped without sill jamb extenders.

Product specifications may change without notice.
Questions? Consult JELD-WEN customer service.

MULLION OPTIONS

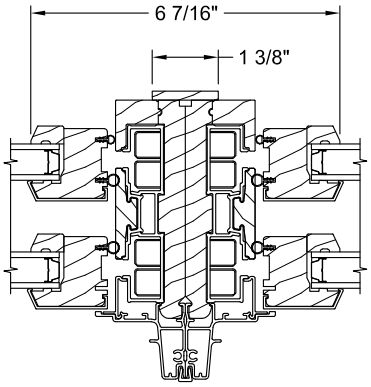

Operator / Operator

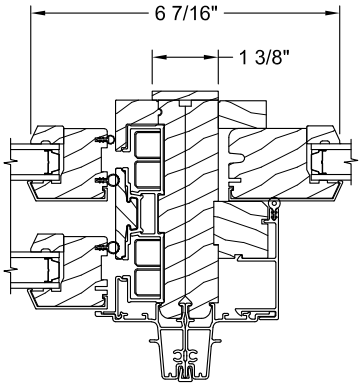

Operator / Stationary

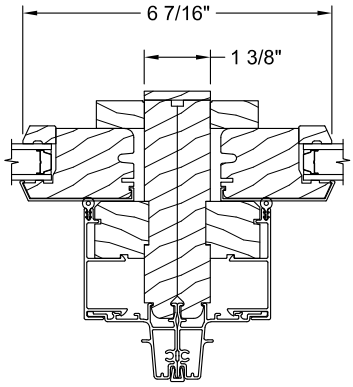

Stationary / Stationary

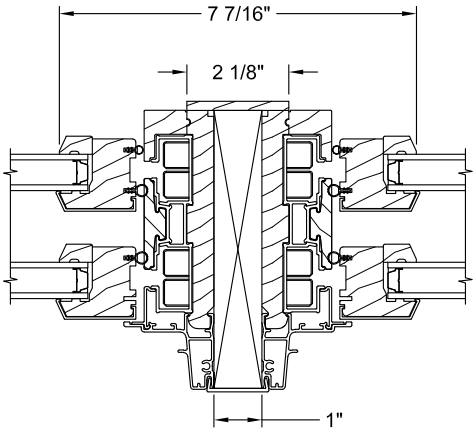

Operator / Operator
with 1" Solid Spread Mull

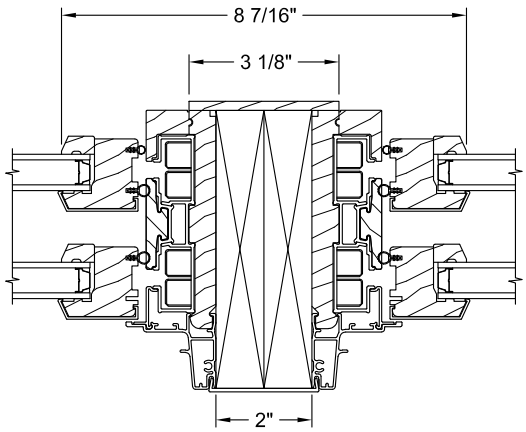

Operator / Operator
with 2" Solid Spread Mull

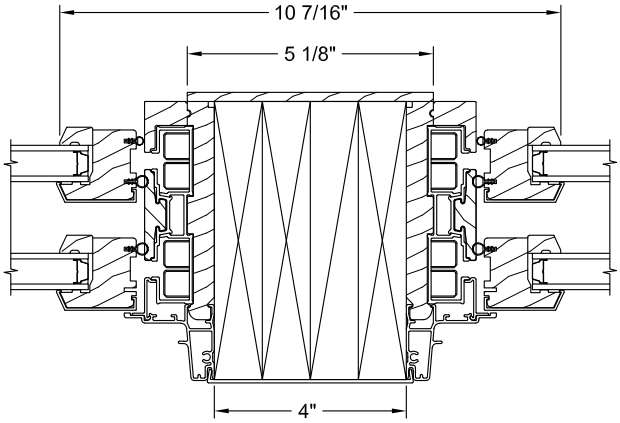

Operator / Operator
with 4" Solid Spread Mull

Product specifications may change without notice.
Questions? Consult JELD-WEN customer service.

MULLION OPTIONS

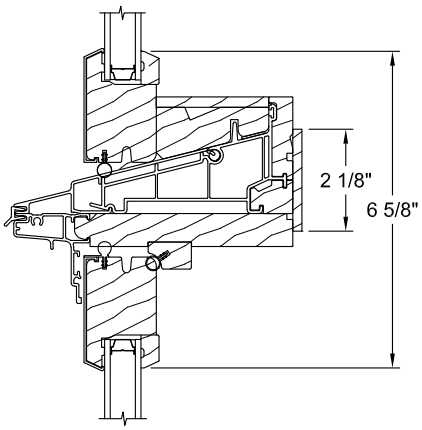

Stationary
Operator

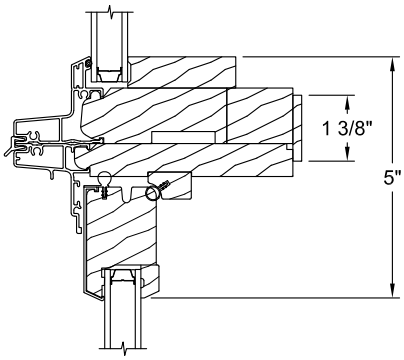

Direct Set
Operator

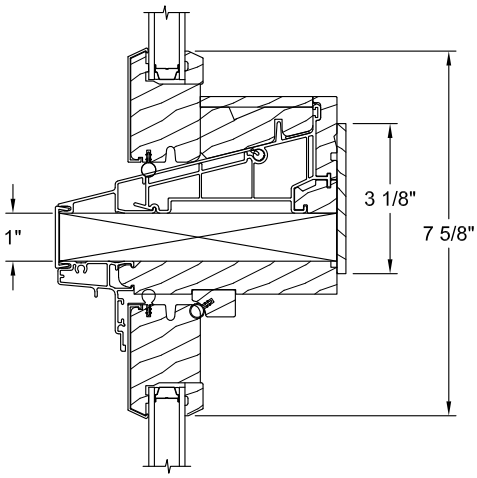

Stationary
Operator
with 1" Solid Spread Mull

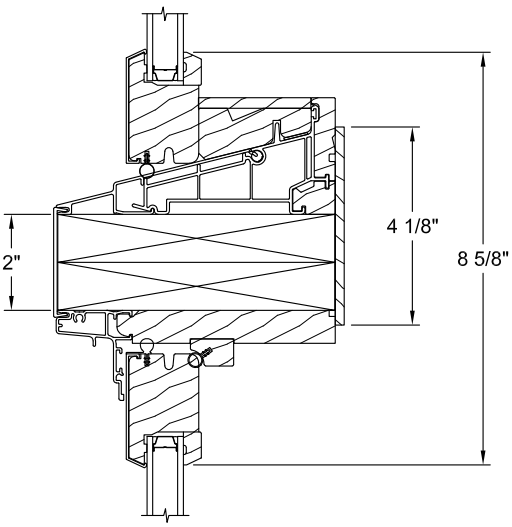

Stationary
Operator
with 2" Solid Spread Mull

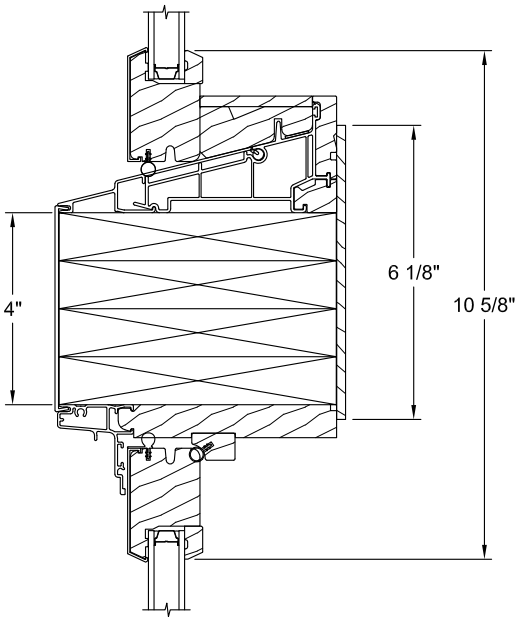

Stationary
Operator
with 4" Solid Spread Mull

Product specifications may change without notice.
Questions? Consult JELD-WEN customer service.

OPERATOR SECTIONS

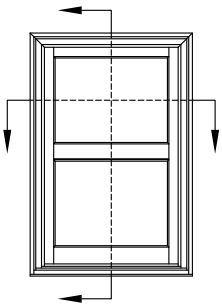

Not To Scale - Reference Only

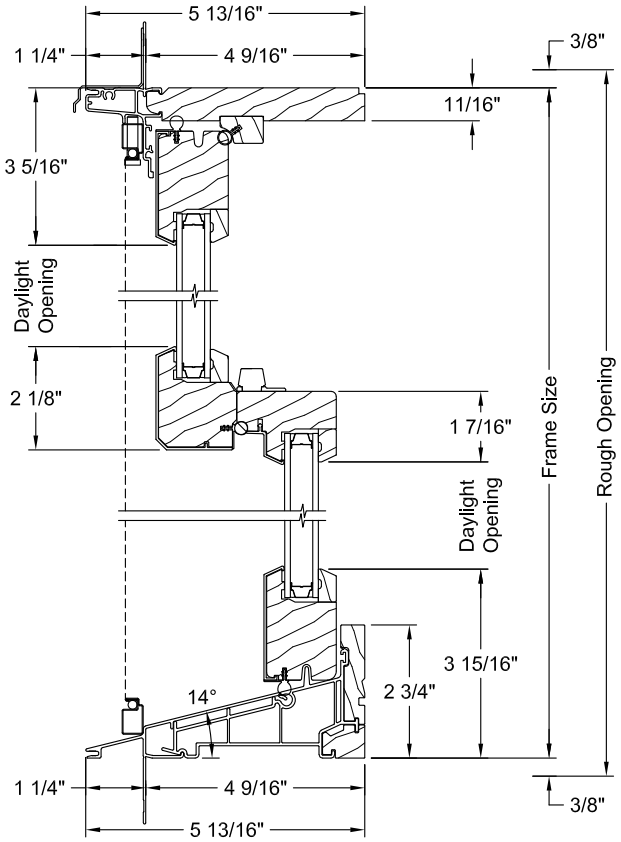

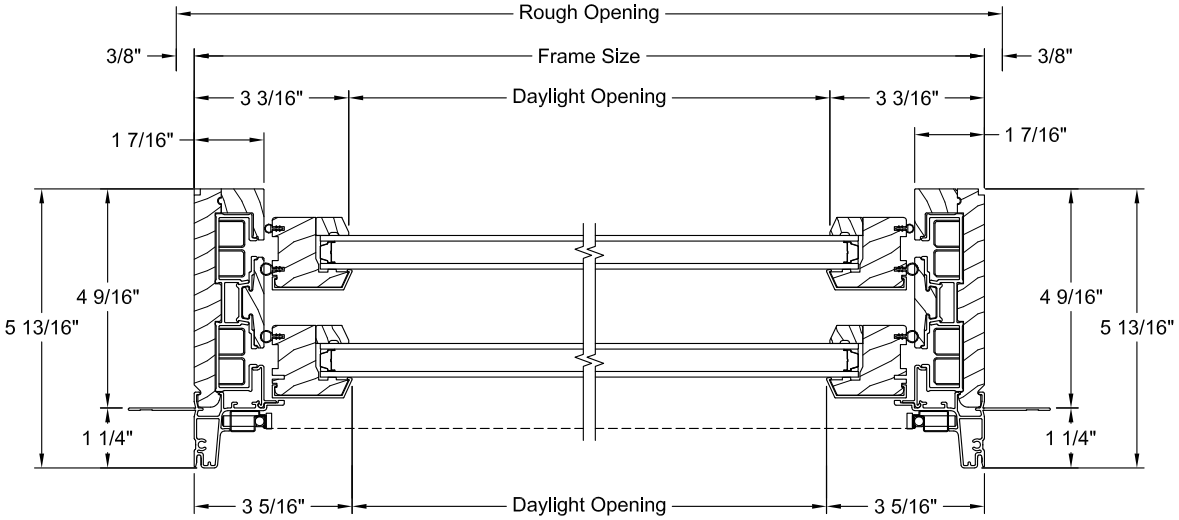

Product specifications may change without notice.
Questions? Consult JELD-WEN customer service.

OPERATOR IMPACT SECTIONS

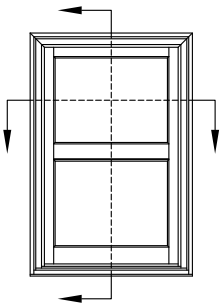

Not To Scale - Reference Only

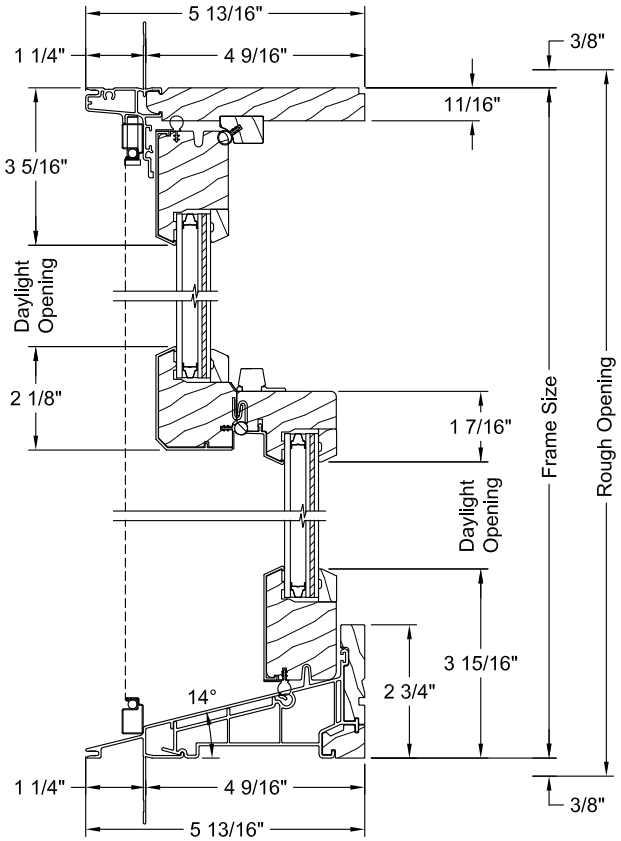

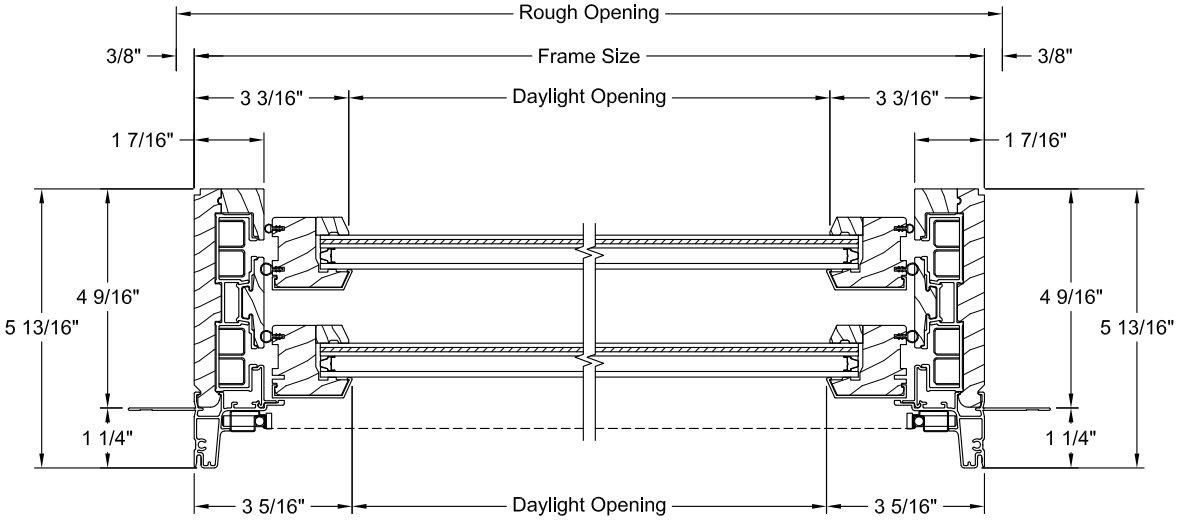

Product specifications may change without notice.
Questions? Consult JELD-WEN customer service.

OPERATOR RADIUS TOP / SEGMENT HEAD - VERTICAL SECTIONS

Operator Radius Top

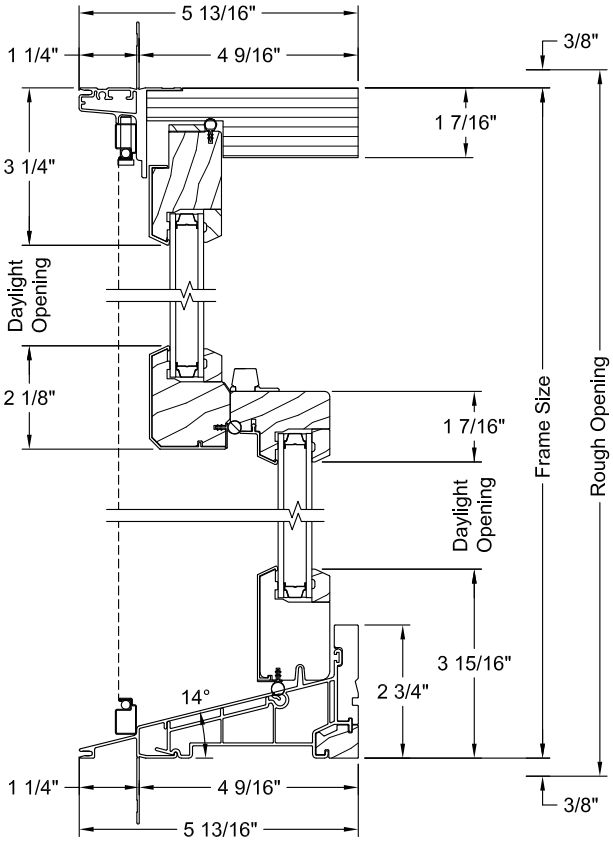

Operator Segment Head

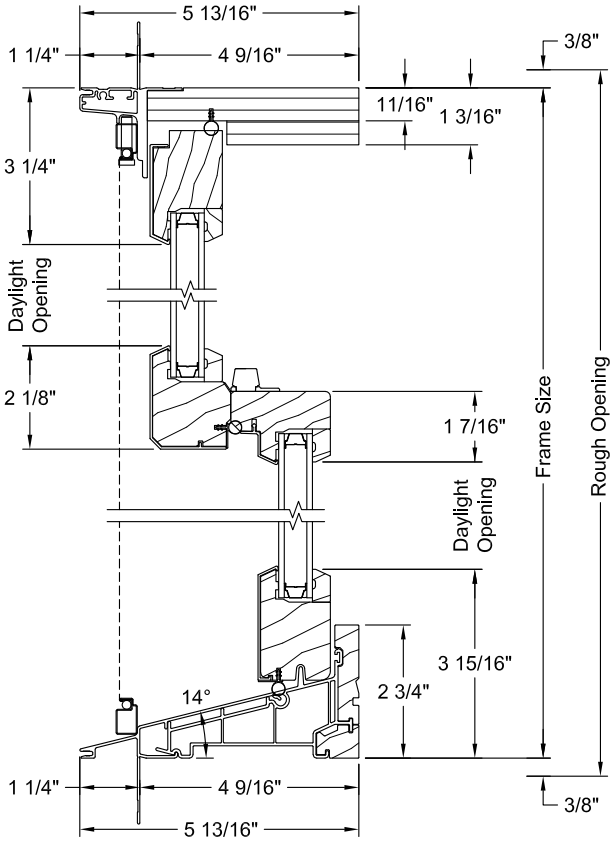

Product specifications may change without notice.
Questions? Consult JELD-WEN customer service.

Scale: 3" = 1' - 0"

PICTURE SECTIONS - 6/4 SASH

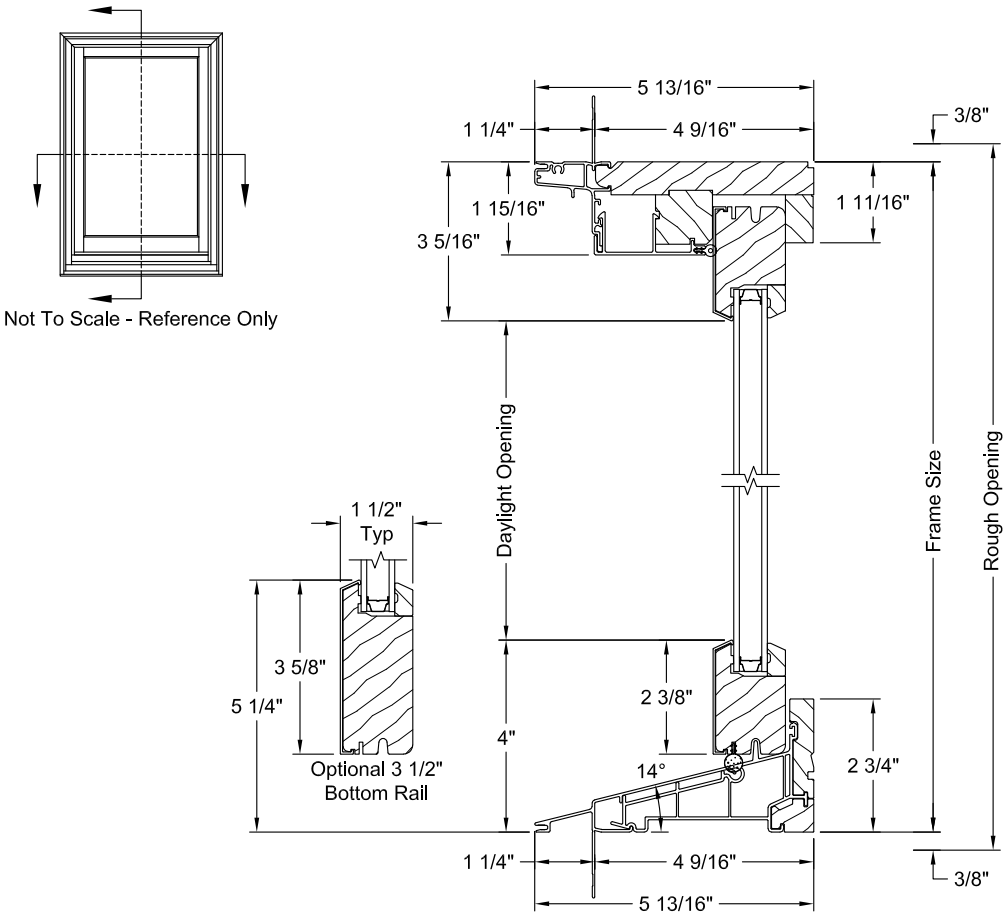

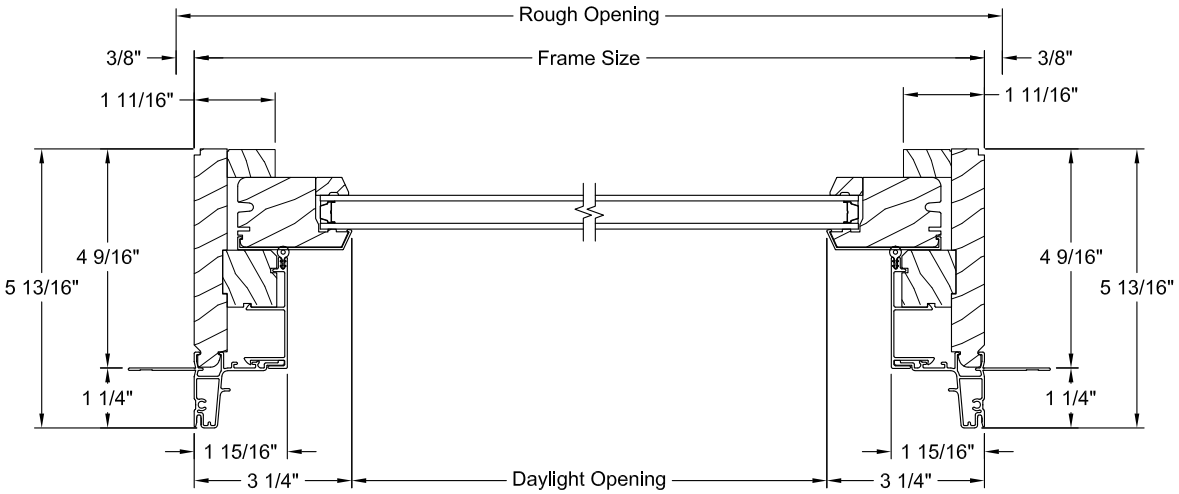

Product specifications may change without notice.
Questions? Consult JELD-WEN customer service.

Scale: 3" = 1' - 0"

PICTURE SECTIONS - 8/4 SASH

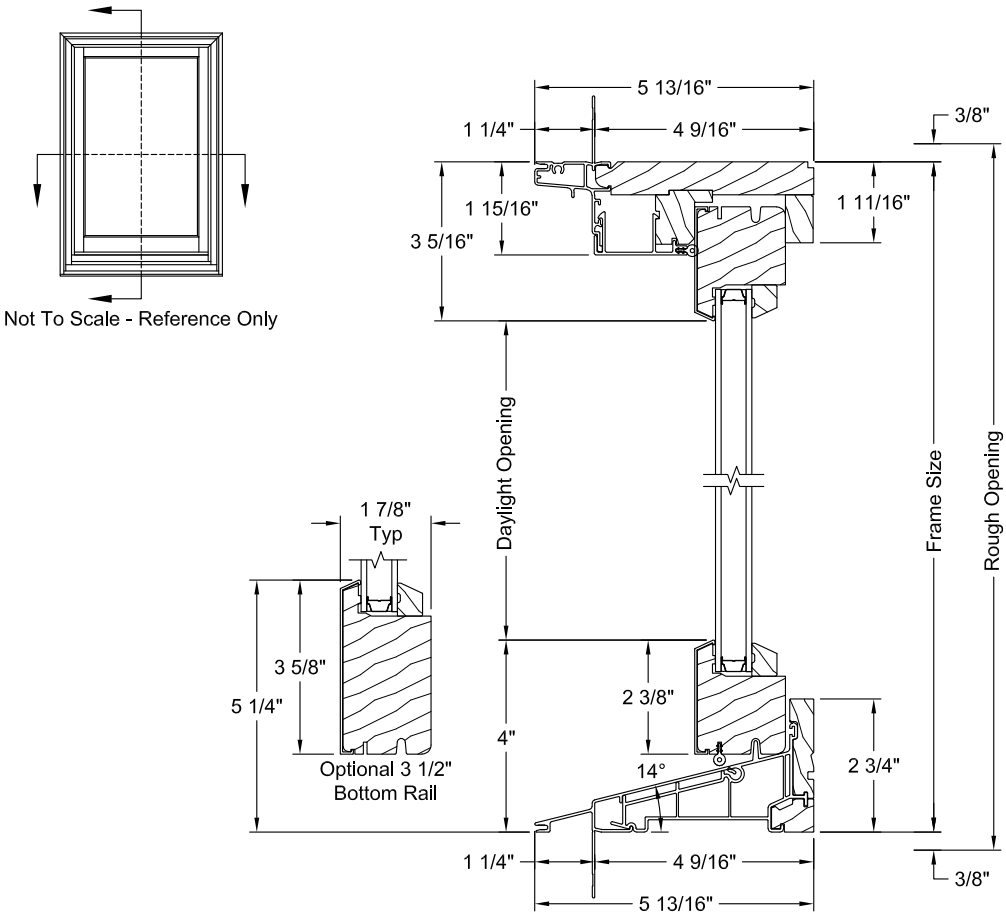

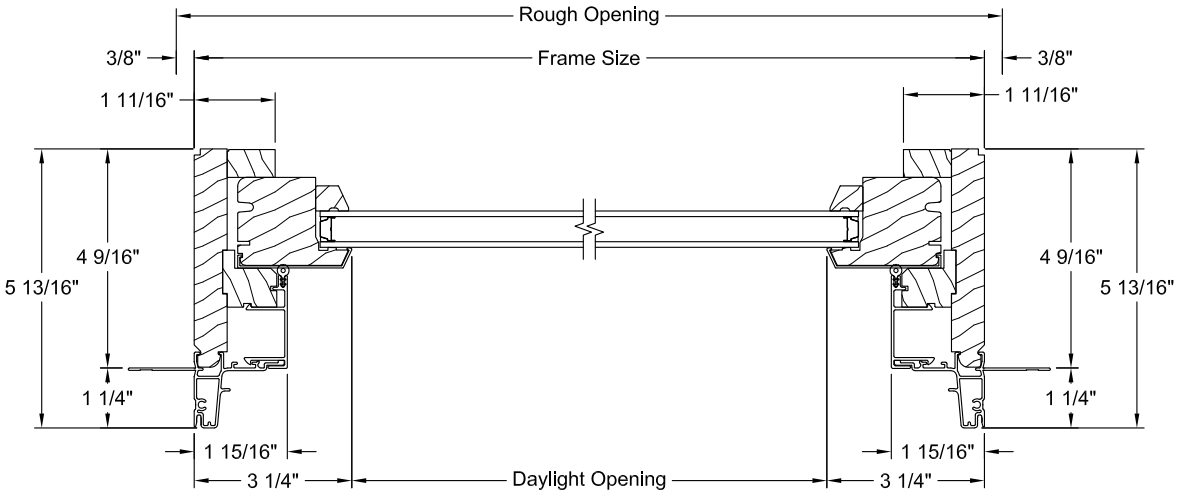

Product specifications may change without notice.
Questions? Consult JELD-WEN customer service.

Scale: 3" = 1' - 0"

PICTURE RADIUS TOP & SEGMENT HEAD - VERTICAL SECTION

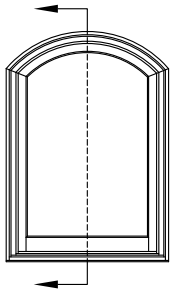

Not To Scale - Reference Only

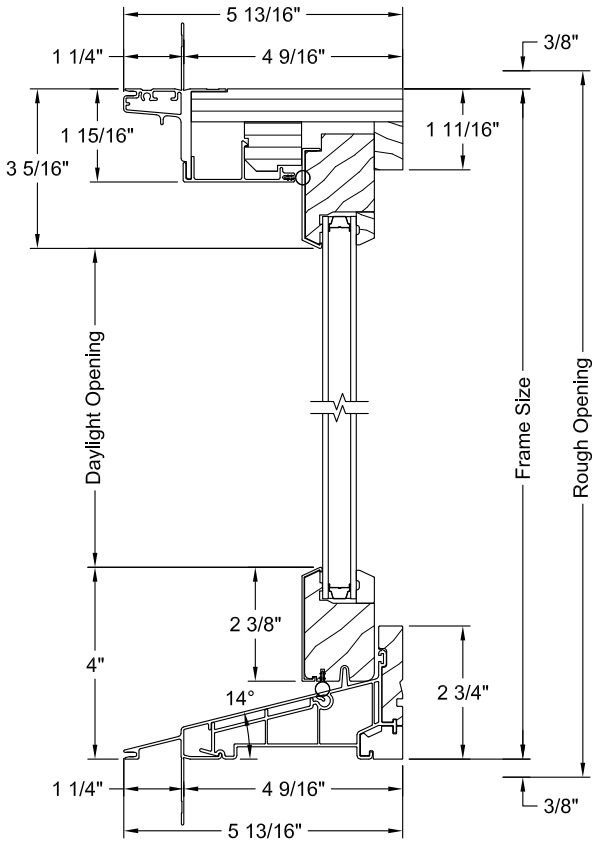

Note: Picture Radius Top & Picture Segment Head have the same cross-section

Product specifications may change without notice.
Questions? Consult JELD-WEN customer service.

TRANSOM SECTIONS

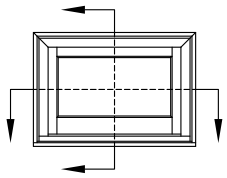

Not To Scale - Reference Only

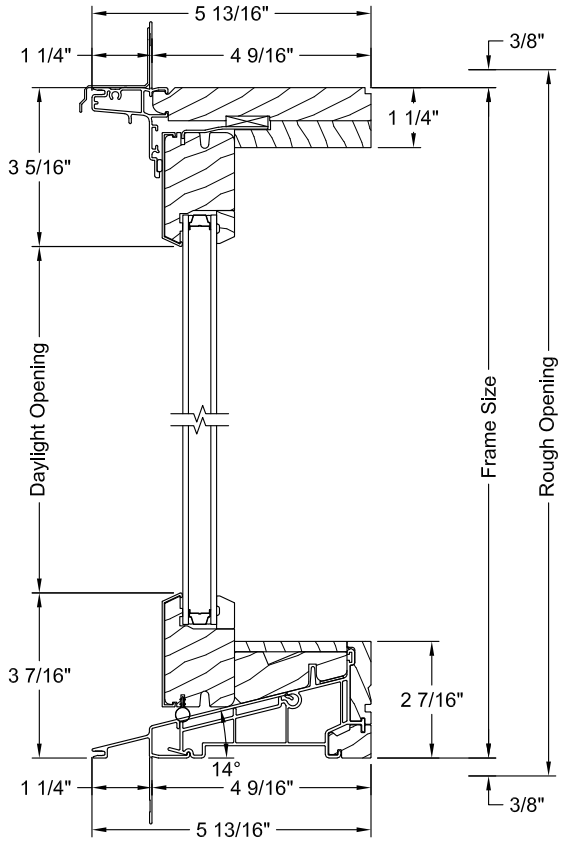

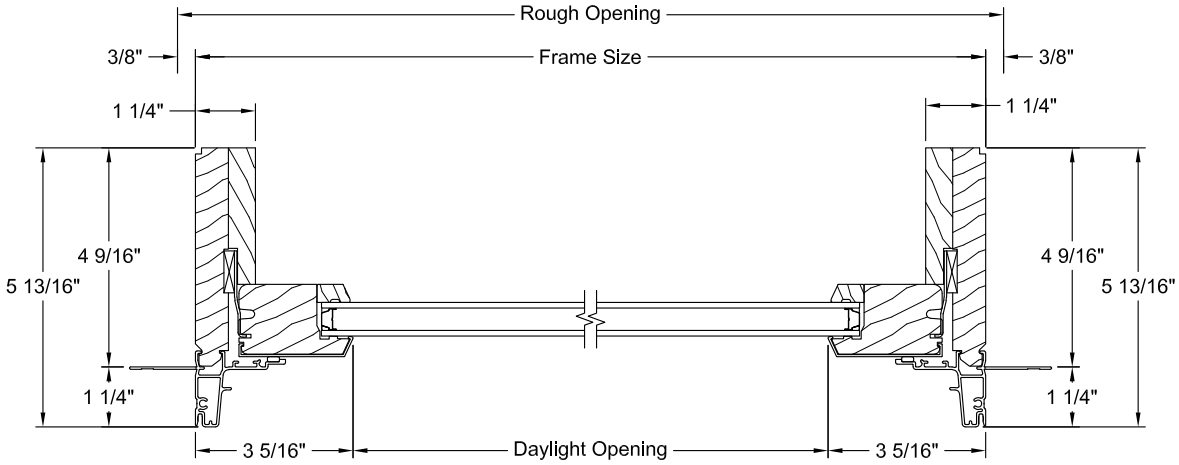

Product specifications may change without notice.
Questions? Consult JELD-WEN customer service.

BAY SECTIONS

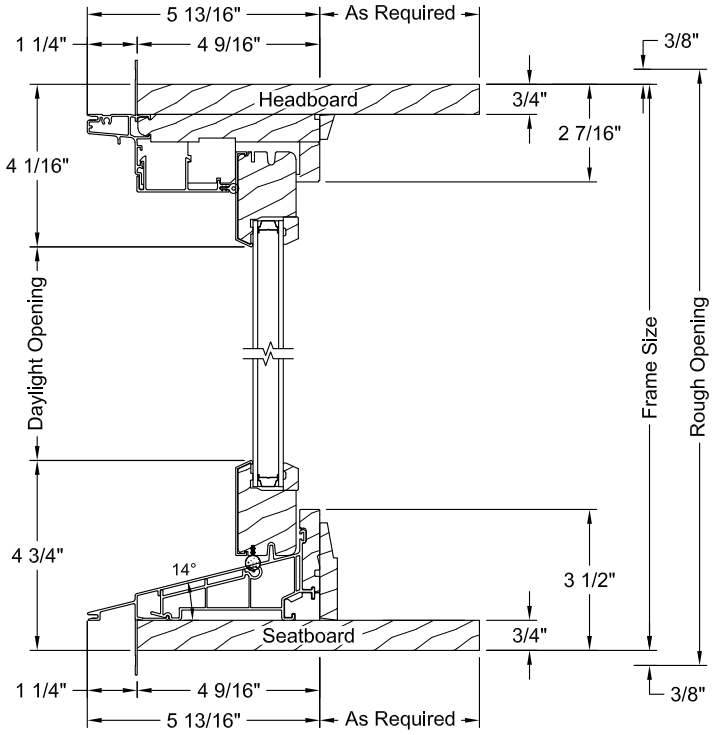

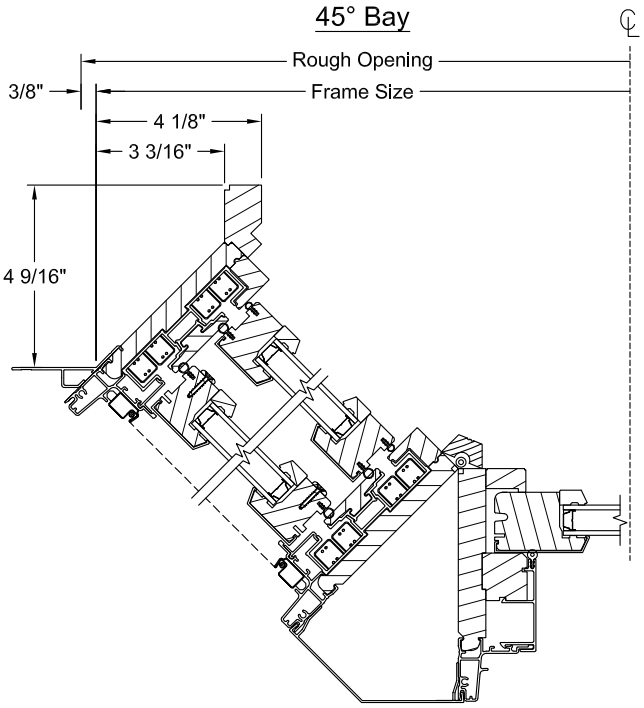

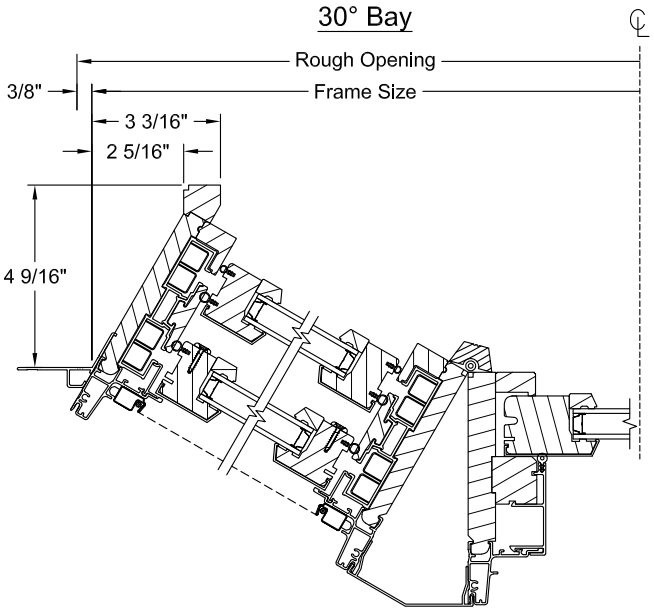

Note: Horizontal views symmetrical across centerline

Product specifications may change without notice.
Questions? Consult JELD-WEN customer service.

BAY STANDARD PROJECTIONS

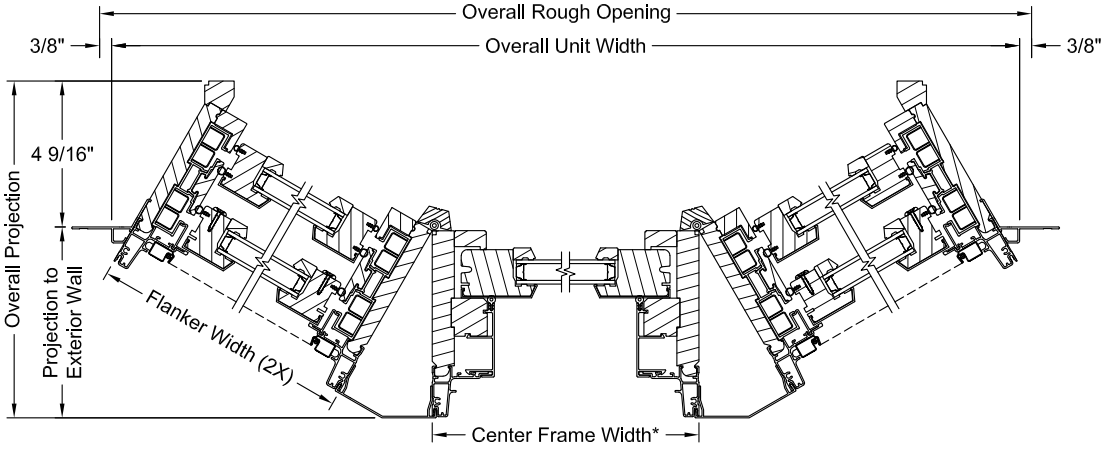

30° Bay				
Flanker Width	Overall Unit Width*	Overall Rough Opening*	Projection to Exterior Wall	Overall Projection
21 3/8"	85 5/8"	86 3/8"	11 5/16"	16 1/2"
25 3/8"	92 9/16"	93 5/16"	13 5/16"	18 1/2"
29 3/8"	99 1/2"	100 1/4"	15 5/16"	20 1/2"
31 3/8"	102 15/16"	103 11/16"	16 5/16"	21 1/2"
33 3/8"	106 7/16"	107 3/16"	17 5/16"	22 1/2"
37 3/8"	113 3/8"	114 1/8"	19 5/16"	24 1/2"
41 3/8"	120 5/16"	121 1/16"	21 5/16"	26 1/2"
45 3/8"	127 3/16"	127 15/16"	23 5/16"	28 1/2"

45° Bay				
Frame Width	Overall Unit Width*	Overall Rough Opening*	Projection to Exterior Wall	Overall Projection
21 3/8"	80 3/4"	81 1/2"	16 7/16"	21 15/16"
25 3/8"	86 3/8"	87 1/8"	19 1/4"	24 3/4"
29 3/8"	92 1/16"	92 13/16"	22 1/8"	27 5/8"
31 3/8"	94 7/8"	95 5/8"	23 1/2"	29"
33 3/8"	97 11/16"	98 7/16"	24 15/16"	30 7/16"
37 3/8"	103 3/8"	104 1/8"	27 3/4"	33 1/4"
41 3/8"	109"	109 3/4"	30 9/16"	36 1/16"
45 3/8"	114 11/16"	115 7/16"	33 7/16"	38 15/16"

Note: 30° bay shown for reference only.
Table values calculated using 4 9/16" jamb depths and standard nail fin.
* Overall Unit Width and Overall Rough Opening calculated using a 44 1/16" Center Frame Width. To calculate the values with a different Center Frame Width, add the difference of the Center Frame Widths to the overall width values.

MIN-MAX SIZING

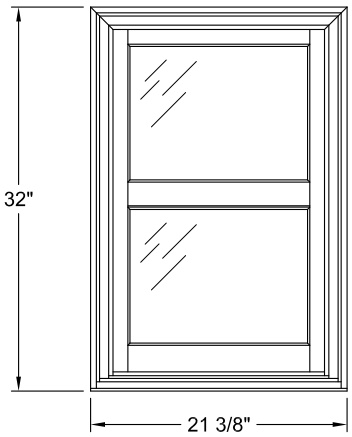

Minimum Size:
21 3/8" x 32"

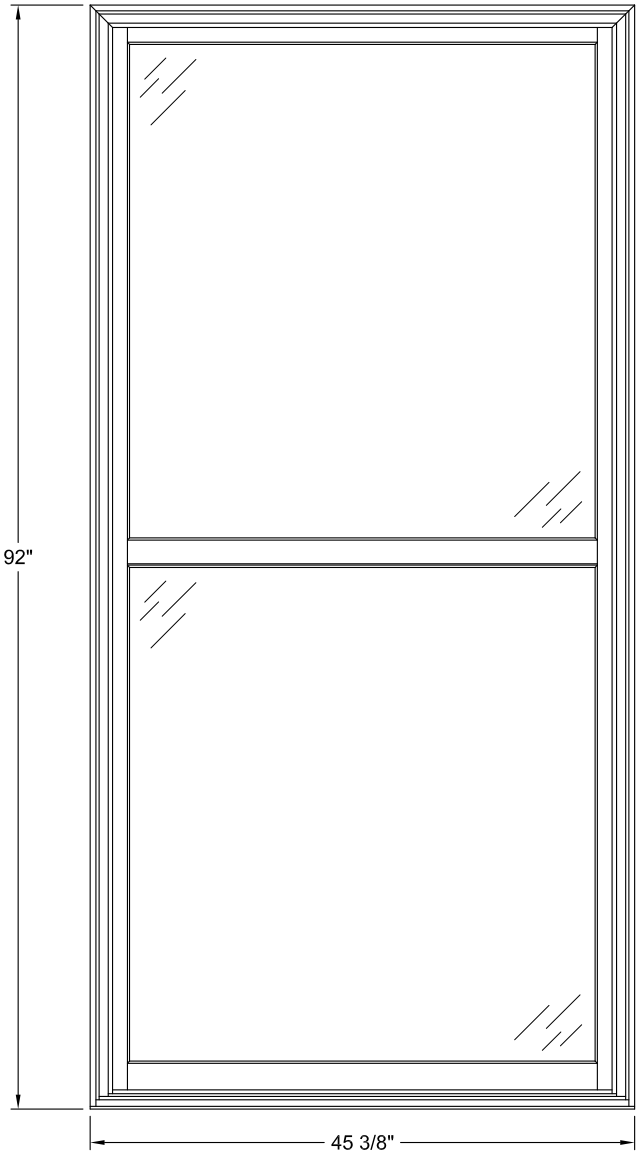

Maximum Size:
45 3/8" x 92"

Operator Width			
21 3/8"	25 3/8"	29 3/8"	33 3/8"
35 3/8"	37 3/8"	41 3/8"	45 3/8"
Operator Height			
32"	36"	40"	44"
48"	52"	56"	60"
64"	68"	72"	76"
80"	88"	92"	

Product specifications may change without notice.
Questions? Consult JELD-WEN customer service.

W-5500™ Clad-Wood Window: Double-Hung

Model Overview

PROJECT TYPE
New construction and replacement

MAINTENANCE LEVEL
Moderate

WARRANTY
20 Year Warranty

COLORS & FINISHES
27 Exterior Colors
28 Interior Finish Options

SCREEN & TRIM OPTIONS
3 Insect Screens
3 Exterior Trim Options

FRAME OPTIONS
Block Frame/Replacement
Integral Nailing Fin

GLASS
Energy efficient, tinted, textured and protective.

DIVIDED LITES
Grilles between the glass.

HARDWARE
1 Lock Option in 9 finishes

CONSTRUCTION
Tilt Sash

MATERIALS
3 Wood Options

PRICING

Many options will influence the price of your window.
To get an estimate, contact your JELD-WEN dealer.

WHERE TO BUY (/EN-US/WHERE-TO-BUY?PID=153767)

GET HELP ON YOUR PROJECT (/EN-US/GET-HELP?PID=153767&JWCT_GETHELP=PRODUCTPAGE)

Model Details & Options

Materials

WOOD OPTIONS

AuraLast® Pine

AuraLast® pine is a patented wood product that provides protection against wood rot, water damage and termites. This water-based process fortifies wood all the way to the core, providing an exclusive level of protection you'll only find through JELD-WEN and backed by our limited lifetime warranty. Distinct color variations occur and the grain can appear straight or erratic depending on how it is cut from the log. The wood will darken and yellow with age, adding character and charm. It machines to a fine, smooth finish and easily accepts lighter stains and paint. Staining is recommended to achieve a uniform appearance because pine naturally contains resins that can affect penetration. Knots should be sealed before painting.

Alder

(Clear and Knotty) – A popular species today because of its pronounced grain and uniform texture. This versatile wood species features a fairly straight grain with areas of burl clusters and small knots. These marks add character and will provide a darker texture and color when finished. Alder varies from pale yellow to reddish brown and it accepts stains exceptionally well. It is also the lightest and least dense. Knotty Alder presents a more rustic look. When stained, alder blends well with walnut, mahogany and cherry.

Douglas Fir

The texture of this softwood is smooth with a straight, even grain and knots that create beautiful swirl patterns. This wood is a light, rosy color that is set off by its remarkably straight and handsome grain pattern. Will tend to “redden” over time when exposed to light. Paints easily and can hold all types of stains and finishes.

Colors & Finishes

EXTERIOR COLORS

Note: Actual colors may vary from samples shown due to printing process and/or differing

monitor calibrations.

Bone White

Brilliant White

Ivory

French Vanilla

Heirloom White

Mocha Cream

Desert Sand

Silver

Smoke

Stone

Flagstone

Cocoa

Surf

Sea Foam

Hunter Green

Moss

Hartford Green

Cranberry

Mesa Red

Stormy

Admiral

Navy

Steele Gray

Dark Chocolate

Chestnut Bronze

Preview Unavailable

Luxury Bronze

Black

INTERIOR FINISH OPTIONS

Note: Actual colors may vary from samples shown due to printing process and/or differing monitor calibrations.

AuraLast Pine Americano Finish

AuraLast Pine Charcoal Finish

AuraLast Pine Clear Lacquer Finish

AuraLast Pine Cordovan Finish

AuraLast Pine Fruitwood Finish

AuraLast Pine Kodiak Finish

AuraLast Pine Walnut Finish

Alder Americano Finish

Alder Charcoal Finish

Alder Clear Lacquer Finish

Alder Cordovan Finish

Alder Fruitwood Finish

Alder Kodiak Finish

Alder Walnut Finish

Fir Americano Finish

Fir Charcoal Finish

Fir Clear Lacquer Finish

Fir Cordovan Finish

Fir Fruitwood Finish

Fir Kodiak Finish

Fir Walnut Finish

Paint Black

Paint Brilliant White

Paint Desert Sand

Paint Dove

Paint Gunmetal

Paint Ivory

Primed

Glass

ENERGY EFFICIENT GLASS

Our optional high-performance Low-E insulating glass lowers energy costs, helps homes stay cooler in the summer and warmer in the winter, reducing the fading of interior furnishings and condensation. It also delivers greater visible light transmittance than tinted glass. Clear glass consists of two panes of glass, sealed with an airspace and the perimeter of the unit is sealed. This option offers maximum visible light transmittance and superb energy efficiency in most climates. With Low-E glass, ENERGY STAR® qualified versions of this product are likely available. This means they meet or exceed the minimum energy efficiency criteria for your climate region. For more information, ask your dealer how to order JELD-WEN ENERGY STAR qualified products specific to your area.

LoĒ³-366

Low-E

Low-E EC

TINTED GLASS

Our optional tinted glass is ideal for climates with intense sunlight. It reduces glare and visible light transmittance, while also keeping homes more comfortable in warm weather. Optional clear glass consists of two panes of glass, sealed with an airspace and the perimeter of the unit is sealed. This option offers maximum visible light transmittance and superb energy efficiency in most climates.

Bronze Tinted

Clear

Gray Tinted

Green Tinted

Bronze Reflective Tinted

TEXTURED GLASS

We offer an array of glass types, each one with its own attractive texture, pattern or color. Add a distinctive touch to our windows with optional textured glass, which lets light in while maintaining privacy. This glass will not only enhance your chosen window and transoms, but also add radiance to your entire home.

Glue Chip

Matte Frost

Narrow Reed

Obscure

Rain

Seedy Reamy

Neat®

With the Neat® glass option, you gain natural cleaning convenience. By harnessing the sun's UV rays (even when the sky is cloudy) to loosen dirt from the glass, rainwater can easily rinse away grime. No manual activation is required.

Preserve

Preserve® film is factory-applied to both the interior and exterior surfaces of the glass. This means the glass surfaces will be reliably protected from debris and scratches that can occur during shipping and handling or at a construction site. So you won't need to spend extra time cleaning your new windows. What's more, it's easy to remove. *Please note, Preserve film is not available with impact-resistant glass or single pane units.

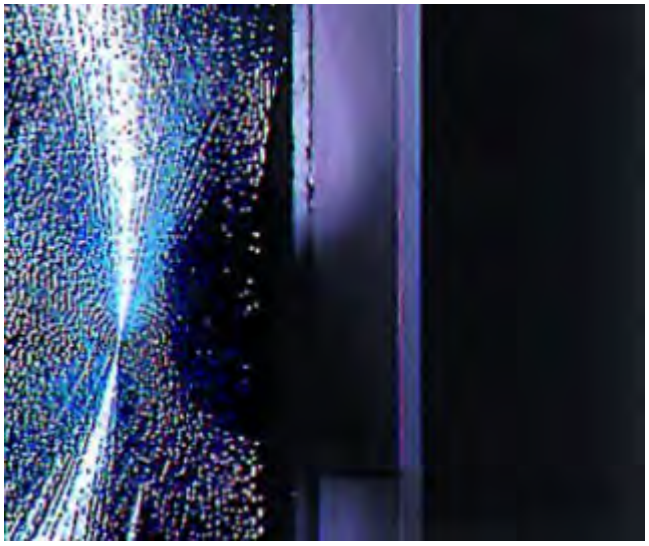

Tempered

The tempered glass option is available in all glass types and provides extra strength, enabling it to withstand force or pressure on its surface and it will not break into sharp pieces. Local building codes often require tempered glass to be used in all windows that are close to the floor or near doors, bathtubs or showers.

Divided Lites

GRILLES BETWEEN THE GLASS

Grilles Between the Glass

Add architectural interest with our divided lite options. Enjoy increased visual appeal and decreased maintenance with our grilles between the glass, which consist of a spacer bar

placed between the panes of the insulating glass. They are an ideal choice because they require no upkeep and will not interfere with window cleaning. We offer 5/8" or 7/8" flat grilles, as well as 5/8" or 1" contour grilles in several grille patterns. These grilles are available in the color that matches the exterior color of the patio door you choose.

FULL-SURROUND REMOVABLE WOOD GRILLES

Full-Surround Removable Wood Grilles

Add architectural interest to your windows with our divided lite options. Our full-surround wood grilles are a convenient way to achieve the look of divided lites. These grilles are positioned on the interior glass and can be removed for easy cleaning. Grilles are available in 7/8", 1-1/8" and 1-3/8" widths in several grille patterns.

SIMULATED DIVIDED LITES

Simulated Divided Lites

Add architectural interest to your windows with our divided lite options. These options include simulated divided lites (SDL) for an authentic look. They feature grilles that are permanently attached to both the interior and exterior glass (aluminum for clad exteriors, wood for wood exteriors), metal bars placed between the panes of insulating glass to provide design detail.

GRILLE DESIGNS

Colonial Grille

No Grille

Prairie Grille

Top Down Grille

Hardware

LOCKS

Sash Lock

LOCK HARDWARE FINISHES

We offer a range of hardware and hardware finishes for our wood and clad-wood windows. We know a Victorian house feels all the more ornate with brass fixtures. And the shine of polished chrome adds a contemporary edge to traditional architecture. Our selection ensures you can make the statement you want down to the last detail.

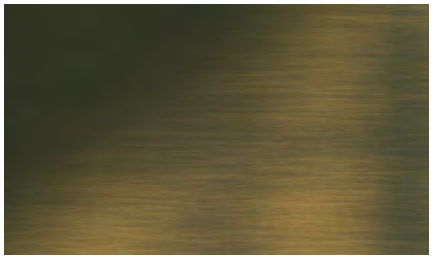

Antique Brass Finish

Black Finish

Brushed Chrome Finish

Chestnut Bronze Finish

Desert Sand Finish

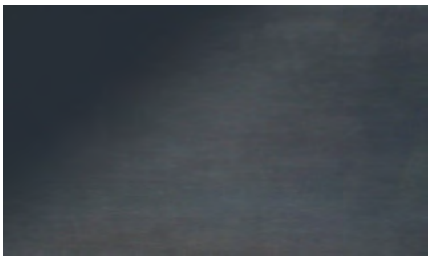

Oil-Rubbed Bronze Finish

Polished Brass Finish

Satin Nickel Finish

White Finish

ADDITIONAL HARDWARE OPTIONS

Window Opening Control Device

Limiting sash opening especially in upper floors, these optional factory-installed devices also meet ASTM F2090-10. The casement solution in both wood and vinyl windows is hidden when the window is in the closed position. When the window is open, you see the red lever that acts as the sash limiter and can be released for full operation. Conversely, when the window is closed, the device is reset. Window opening control devices are one of many tools a homeowner can choose to prevent children from falling out of a window. There are a number of additional steps the consumer can do to prevent such accidents from occurring.

Screens & Trim

INSECT SCREENS

BetterVue

BetterVue™ screens are designed to keep more insects outside, while letting more natural light inside compared to regular screens. BetterVue insect screens feature fine, black fiberglass mesh with a light gloss finish, and the frame is available to match the patio door color you choose. *Insect screens are intended to allow air and light in, while keeping insects out. They are not intended to stop children from falling through an open window or door. For safety screens and other security devices, contact your local building supply retailer.

UltraVue™

UltraVue™ screens are standard and allow greater amounts of natural light in your home when compared to aluminum mesh. UltraVue insect screens feature fine, black fiberglass mesh with a light gloss finish, and the frame is available to match the window color you choose. *Insect screens are intended to allow air and light in, while keeping insects out. They are not intended to stop children from falling through an open window or door. For safety screens and other security devices, contact your local building supply retailer.

Aluminum Mesh

Our optional aluminum mesh insect screens keep insects outside, while letting in natural light. The frames are available with colors to match the window color you choose.
*Insect screens are intended to allow air and light in, while keeping insects out. They are not intended to stop children from falling through an open window or door. For safety screens and other security devices, contact your local building supply retailer.

EXTERIOR TRIM

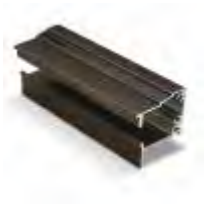

Brickmould for Clad Exterior

Flat Casing for Clad Exterior

Adams Casing for Clad Exterior

Construction & Framing

CONSTRUCTION

Tilt Sash

Our double-hung windows include a tilt latch which allows you to easily tilt the sash in to allow for convenient cleaning from the inside of your home. Tilt latches will match the hardware color of your window.

FRAME OPTIONS

Block Frame/Replacement

For New Construction and Replacement. A block frame is for a window with a frame that does not include a nail fin. Installation can be done simply and neatly without disturbing exterior siding, stucco, interior trim, paint or wallpaper. The block frame is ideal for new construction installation into concrete or masonry walls. This frame has the same inside and outside dimensions.

Integral Nailing Fin

For New Construction and Replacement. Our windows come standard with a 1-1/4" pre-punched nailing fin for easy installation into new construction applications. The nailing fin is integral to the frame. It surrounds the full perimeter of the frame and helps make installations weathertight. It is appropriate for homes with siding, stucco or brick exteriors.

Energy & Sustainability

SUSTAINABLE SOLUTIONS

Sustainability at JELD-WEN

At JELD-WEN, sustainability is nothing new. With origins rooted in wood product manufacturing, our legacy has been to make windows, doors and components in a manner consistent with efficient use of what nature provides. In effect, we've always strived to make stiles and sash, not sawdust. To us, minimizing waste has always made

good ecological and business sense. Our mission is to develop high performance, high-value products that satisfy our customers' needs, while also caring for our communities by seeking ways to reduce our impact on the environment. We also realize that there is still work to be done. Sustainability is a journey, and our on-going efforts will remain directed toward continual improvement of our products, processes and culture. We do this not because it's popular. We do it because it's the right thing to do.

ENERGY STAR® Qualified Options

We are committed to offering products for improved energy efficiency in your home. This product has ENERGY STAR qualified options to save energy and meet current requirements. As proof of our commitment, JELD-WEN has received the 2010 ENERGY STAR Partner of the Year award. The award signifies outstanding contributions to protecting the environment through energy efficiency and is presented to only a handful of 17,000 organizations that participate in the program each year. Our company-wide commitment to energy conservation excellence is part of our continued commitment to bringing reliability to your home and life. For more information, ask your dealer about JELD-WEN ENERGY STAR products.

NGBS Green Certified

Wood Green Certified

FSC®-certified ENERGY STAR® wood windows and patio doors with AuraLast® wood manufactured by JELD-WEN have been approved for points toward National Green Building Certification to the ICC 700-2008 National Green Building Standard for residential construction.

Reduced VOCs

The AuraLast® manufacturing process releases 96 percent fewer VOCs than traditional treatments, one more reason that AuraLast--The Worry-Free Wood® really is worry-free. AuraLast is JELD-WEN's exclusive water-based wood protection process. Unlike typical solvent-based dip treatments that only coat a thin layer on the wood's surface, AuraLast delivers durable 100 percent surface-to-core protection. AuraLast is 100 percent real wood, so homeowners don't have to sacrifice the beautiful appearance for industry-leading protection.

WHERE TO BUY (/EN-US/WHERE-TO-BUY)

GET HELP ON YOUR PROJECT (/EN-US/GET-HELP?JWCT_GETHELP=FOOTERCTA)

(https://www.facebook.com/jeldwen/) (https://twitter.com/jeldwen) (https://www.youtube.com/user/JELDWENWINDOWS)

WINDOWS & DOORS +

DISCOVER +

SUPPORT +

OUR COMPANY +

© 2020 JELD-WEN, Inc.

PRIVACY POLICY (/EN-US/ABOUT-US/GENERAL-INFORMATION/PRIVACY-POLICY) | SUPPLY CHAIN TRANSPARENCY (/EN-US/ABOUT-US/COMPANY/SUPPLY-CHAIN-TRANSPARENCY) | INTERNATIONAL (HTTP://JELD-WEN.NET/)

Audience Survey